ROHL

Authentic Luxury for Kitchen and Bath®

www.rohlhome.com

3-Hole Deck Mounted Column Spout Tub Filler

ROHL Country Bath Collection

A1414LM (Metal Levers)
A1414LP (Porcelain Levers)
A1414XM (Cross Handles)
A1414LC (Swarovski® Crystal Levers)
A1414XC (Swarovski® Crystal Cross Handles)

FEATURES

- Fixed spout
- 1/4-turn ceramic valves
- 3 x 1 5/16″ cutouts
- 9 7/8″ spout reach
- 7 33/64″ spout height
- 15-17 GPM at 45 PSI
- 3/4″ NPT connectors
- Solid brass

COLORS/FINISHES

- Polished Chrome
- Polished Nickel
- Satin Nickel
- Tuscan Brass
- Inca Brass

WARRANTY

- Limited Lifetime*

* No Warranty on Tuscan Brass Finish (TCB)

A1414LM & A1414LP

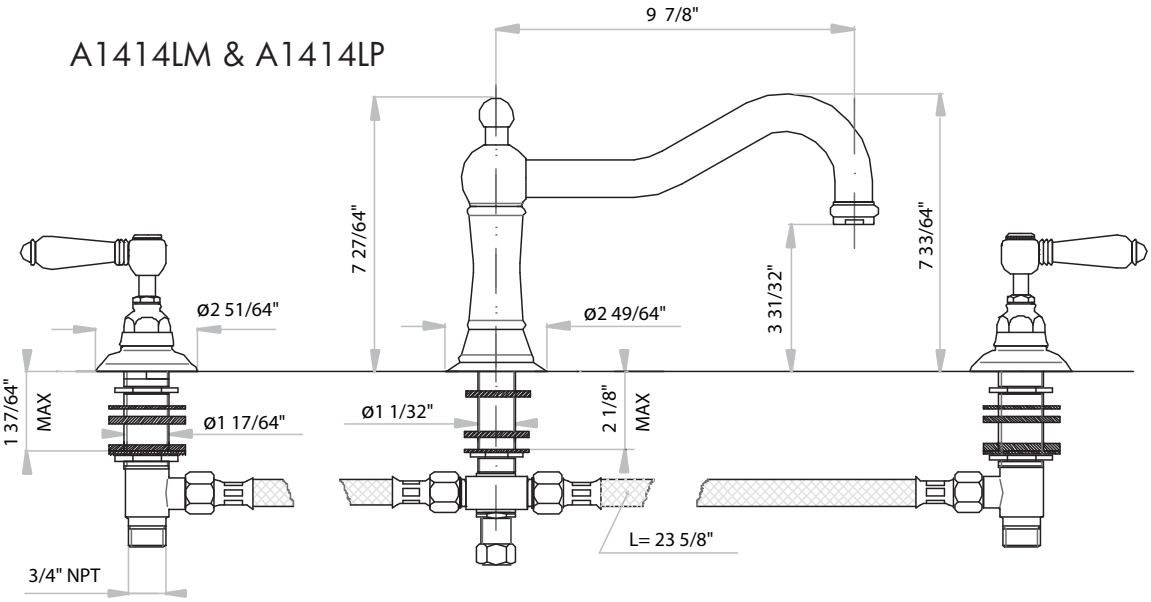

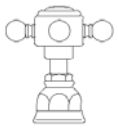

A1414XM

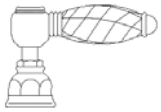

A1414LC

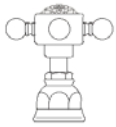

A1414XC

Consult your local ROHL showroom for additional information and specifications. For complete warranty details and a list of showrooms, go to www.rohlhome.com.

ROHL

Authentic Luxury for Kitchen and Bath®

www.rohlhome.com

A1414 Spare Parts

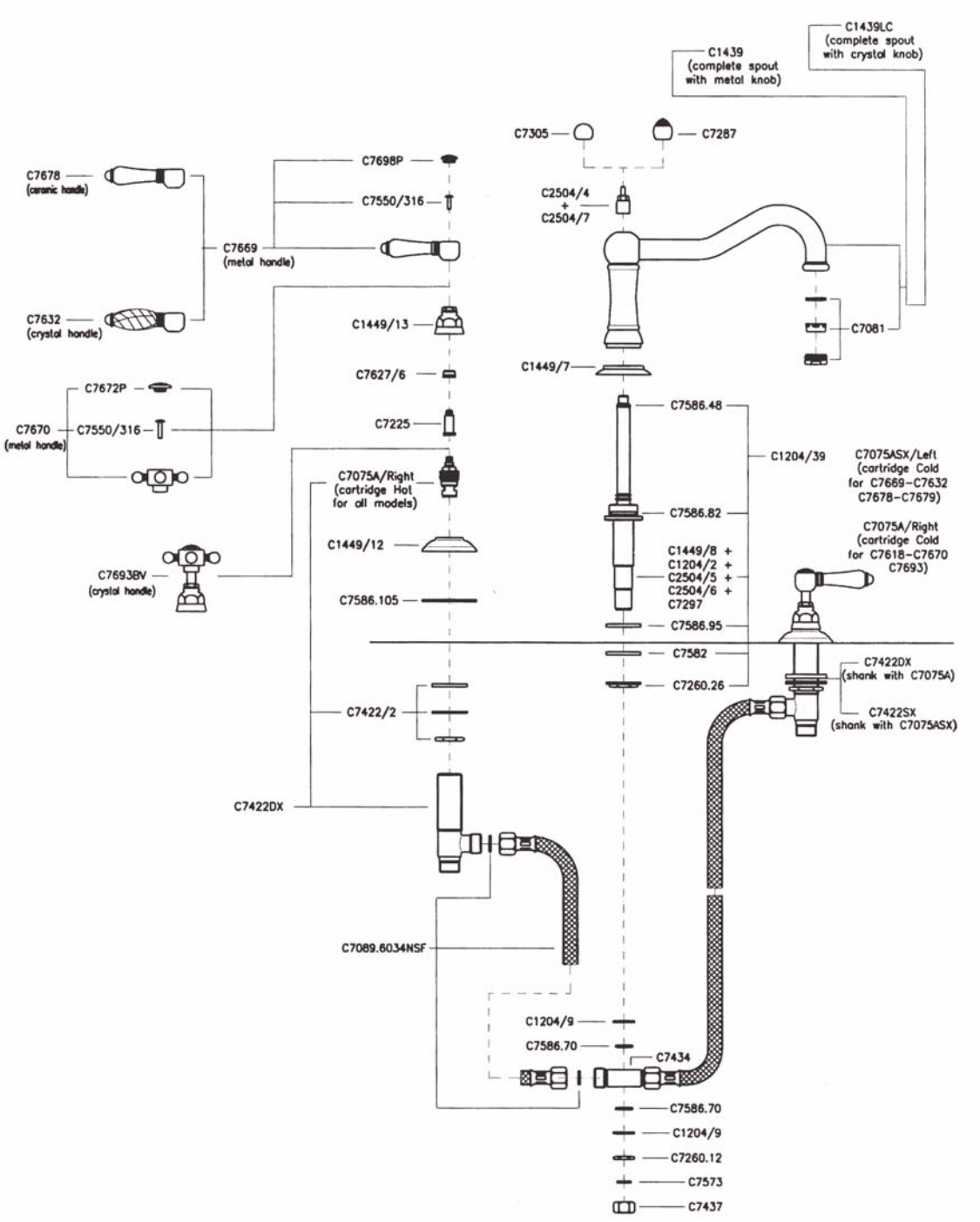

Consult your local ROHL showroom for additional information and specifications. For complete warranty details and a list of showrooms, go to www.rohlhome.com.