"Creations"®
by ALNO, INC.

PRODUCT SHEET

SPECIFICATIONS

CRYSTAL CONTEMPORARY II
6″ TOWEL RING

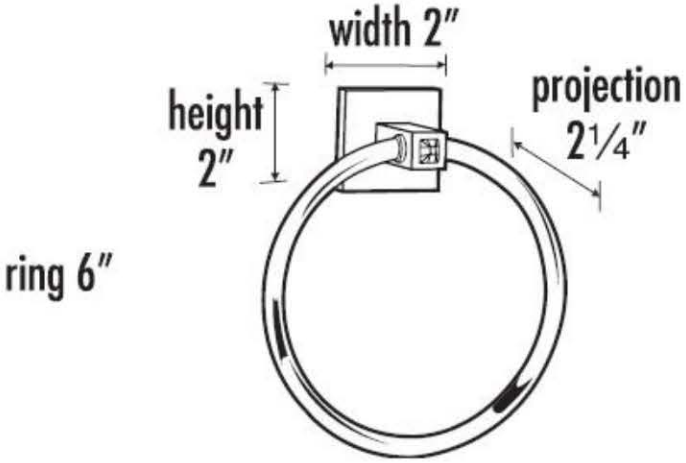

FEATURES
Modern styling
Multiple finishes
Concealed installation

WARRANTY
Limited lifetime

FINISHES
Polished Chrome (PC)
Satin Nickel (SN)

MATERIAL
Brass
Swarovski Crystal

Item#
C8440

NOTE: Dimensions and specifications are subject to change without notice.

T 818.882.6028 F 818.700.1540 www.alnoinc.com