"Creations"® by ALNO, INC.

PRODUCT SHEET

SPECIFICATIONS

CRYSTAL

PULLS

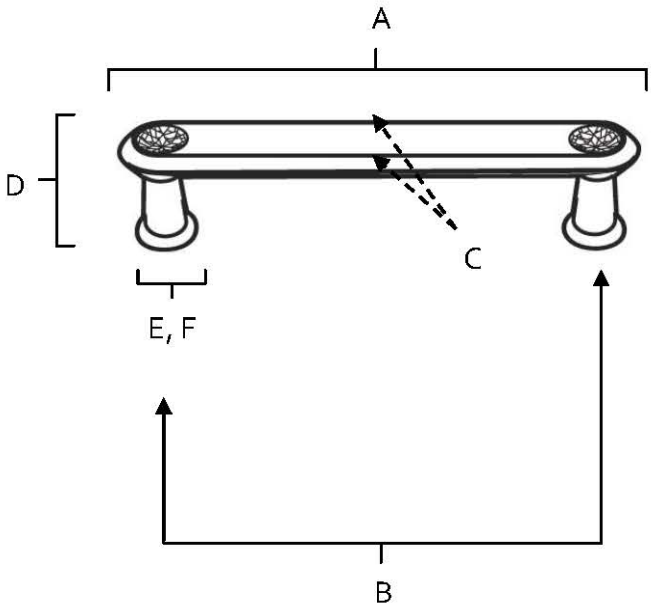

Item#	A	B	C	D	E (L)	F (W)
C214-3	3 5/8"	3"	5/8"	1"	7/16"	7/16"
C214-35	4 1/8"	3 1/2"	5/8"	1"	7/16"	7/16"
C214-4	4 5/8"	4"	5/8"	1"	15/32"	15/32"
C214-6	6 5/8"	6"	11/16"	1 1/4"	1/2"	1/2"

KEY:

A	-	Overall Length
B	-	Center to Center
C	-	Handle Width
D	-	Projection
E	-	Mount Length
F	-	Mount Width

FEATURES
Traditional styling
Multiple finishes
Concealed installation

WARRANTY
Limited lifetime

FINISHES
Polished Brass (PB)
Polished Chrome (PC)
Bronze (BRZ)
Polished Antique (PA)
Polished Nickel (PN)
Satin Nickel (SN)
Gold (GLD)

MATERIAL
Brass
Swarovski Crystal

NOTE: Dimensions and specifications are subject to change without notice.

T 818.882.6028 F 818.700.1540 www.alnoinc.com