Installation Instructions and Use & Care Guide

Standard Condensing Residential Gas Tankless Water Heater

Residential On-Demand Gas Tankless Water Heater
(X3® TECHNOLOGY available on some models)

Read this manual and the labels on the water heater before you install, operate, or service it. This water heater is designed for Natural Gas operation only. If you have difficulty following the directions, or aren't sure you can safely and properly do any of this work yourself:

- Call our Technical Assistance Hotline which is listed on your warranty. We can help you with installation, operations, troubleshooting, or maintenance. Before you call, write down the model and serial number from the water heater's rating plate.
- Incorrect installation, operation, or service can damage the water heater, your house and other property, and present risks including fire, scalding, electric shock, and explosion, causing serious injury or death.

WARNING: If the information in these instructions is not followed exactly, a fire or explosion may result causing property damage, personal injury or death.

Do not store or use gasoline or other flammable vapors and liquids in the vicinity of this or any other appliance.

WHAT TO DO IF YOU SMELL GAS

- **Do not try to light any appliance.**
- **Do not touch any electrical switch; do not use any phone in your building.**
- **Immediately call your gas supplier from a neighbor's phone. Follow the gas supplier's instructions.**
- **If you cannot reach your gas supplier, call the fire department.**

Installation and service must be performed by a qualified installer, service agency or the gas supplier.

MODELS:

TM-160M-N, TM-180M-N, TM-199M-N
TM-160X3-N, TM-180X3-N, TM-199X3-N

NATURAL GAS ONLY

(M MODELS AVAILABLE IN US ONLY)

LOW LEAD CONTENT

Keep this manual with the heater for future reference whenever maintenance, adjustment or service is required.

Retain your original receipt as proof of purchase.

February 2025

100383494_2000838040

TABLE OF CONTENTS

WATER HEATER BASICS 4

Component Overview (X3® Model Shown) 4

Typical Installation (X3® Model Shown) 5

Dimensions 6

Supply Connections 7

Product Specification and Technical Data 8

IMPORTANT SAFETY INFORMATION 9

RISKS DURING INSTALLATION AND MAINTENANCE 10

RISKS DURING OPERATION 10

GETTING STARTED 12

Read Before Installation 12

Included Items 14

Available Accessories 15

Recommended Tools and Materials 16

Recommended Accessories 16

INSTALLATION 17

Installation Environment 17

Unit Clearances 17

Mounting the Water Heater 17

Combustion and Venting Installation 18

Combustion Air Supply Options 20

Venting 21

Installing the Vent Pipe 23

Exhaust Vent for Indoor Installation 24

Input Rate at Maximum Vent Length 24

Typical PDV Configurations: 25

Typical PV Configurations: 25

Vent Terminations 26

Clearances for Sidewall Terminations 29

Clearances for Rooftop Terminations 31

Exhaust Vent for Outdoor Installation 34

TABLE OF CONTENTS

Gas Supply and Gas Pipe Sizing 35
Water Connections 37
X3® Technology 38
Pressure Relief Valve 39
Condensate Drain 40
Recirculation 40
Electrical Connections 42
Accessory Connections 43
Cascade System 44
OPERATION 46
FOR YOUR SAFETY, READ BEFORE OPERATING 46
Start-Up Instructions 46
Shut-Down Instructions 46
Emergency Shut-Down 46
Display Overview 48
Temperature Settings 49
Configuration Mode (C Mode) 50
Unit Conversion Mode 52
MAINTENANCE 53
Regular Maintenance 53
Freeze Protection System 53
Unit Draining & Power Outage (Freeze Protection) 54
Discharge Condensate 54
Inlet Water Filter 54
TROUBLESHOOTING 55
General Troubleshooting 55
Error Codes 57
Fault Analysis of Error Codes 58
COMPONENT LIST 64
APPENDIX 67
Flow Rate Capacity Chart 67

Component Overview (X3® Model Shown)

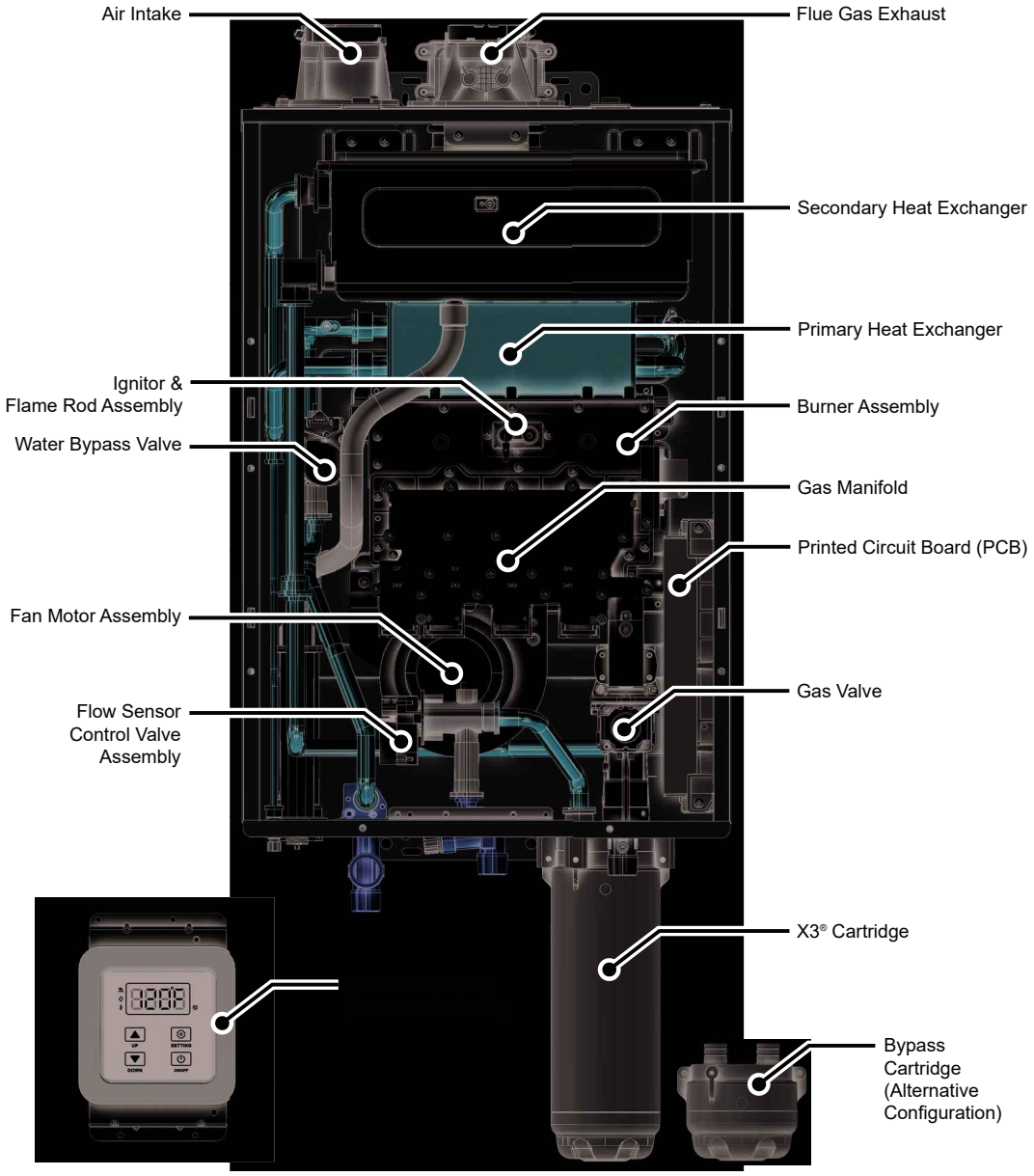

X3® Technology (X3® Model):

This water heater is equipped with X3® Scale Prevention Technology to inhibit scale formation within the heat exchanger tubing of this unit. Part of the X3® Technology's anti-scale protection comes from the special X3® Cartridge media. The X3® Cartridge must be installed into the manifold located on the underside of the heater cabinet prior to operation of the unit. X3® Scale Prevention Technology reduces the formation of scale in the heat exchanger, extending the operating life of the unit in typical potable water installations. Specific water conditions may impact the efficiency of X3®, such as excessive iron or manganese levels. The maximum allowable limit of iron is 0.3 mg/l or 0.3 ppm and manganese is 0.05 mg/l or 0.05 ppm. Levels greater than these will reduce the effectiveness of the X3®. Refer to the guidelines below and consult a water quality expert to determine if your water is within acceptable X3® and EPA guidelines.

NOTICE: Pressure Relief Valve supplied in the box with this model.

Bypass Cartridge (M Model Available in US Only):

The Bypass cartridge will come preinstalled from the factory. Please verify the three screws securing the Bypass cartridge are tightened. See page 38.

NOTICE: Pressure Relief Valve will need to be field supplied with this model.

Typical Installation (X3® Model Shown)

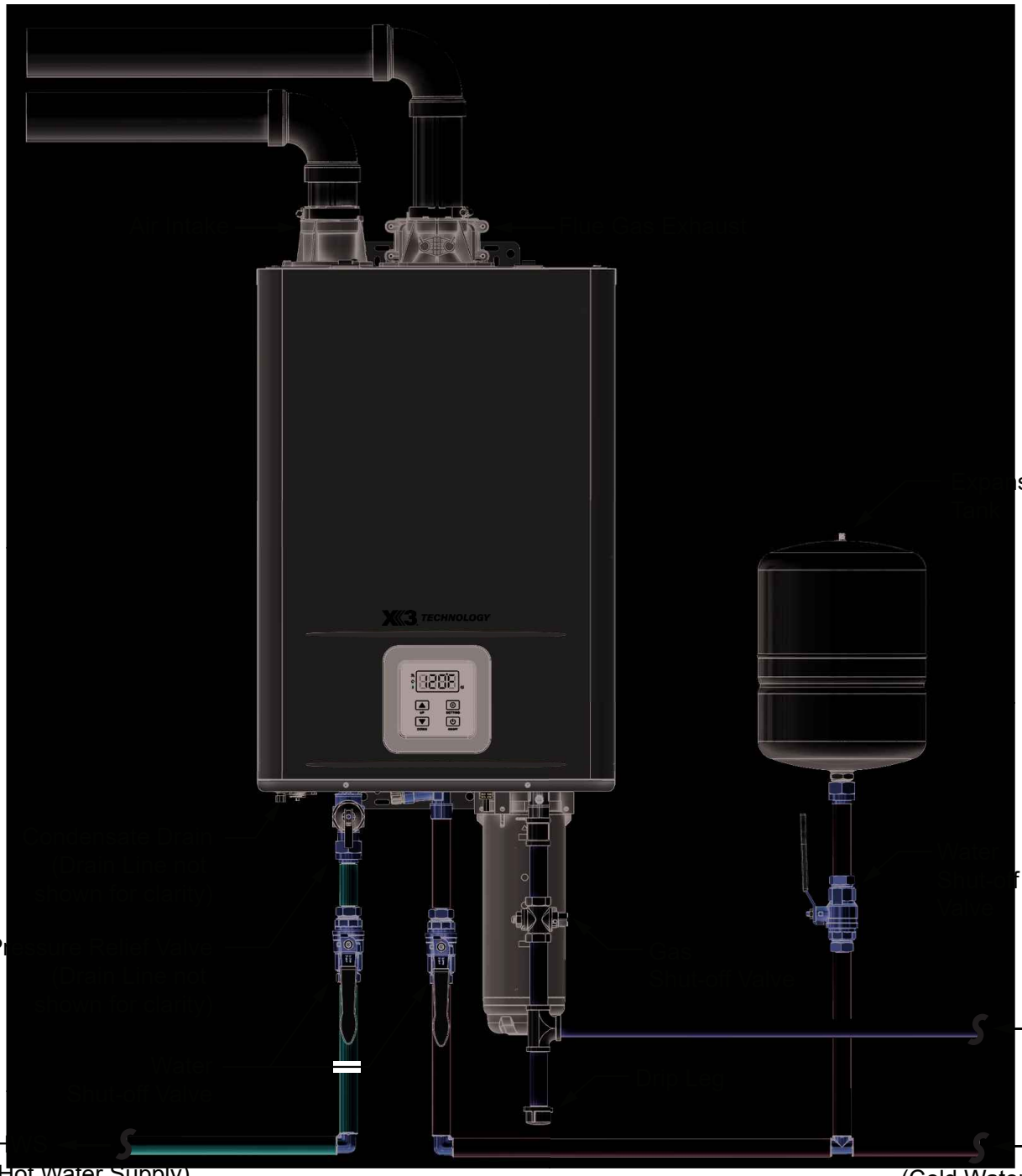

Dimensions

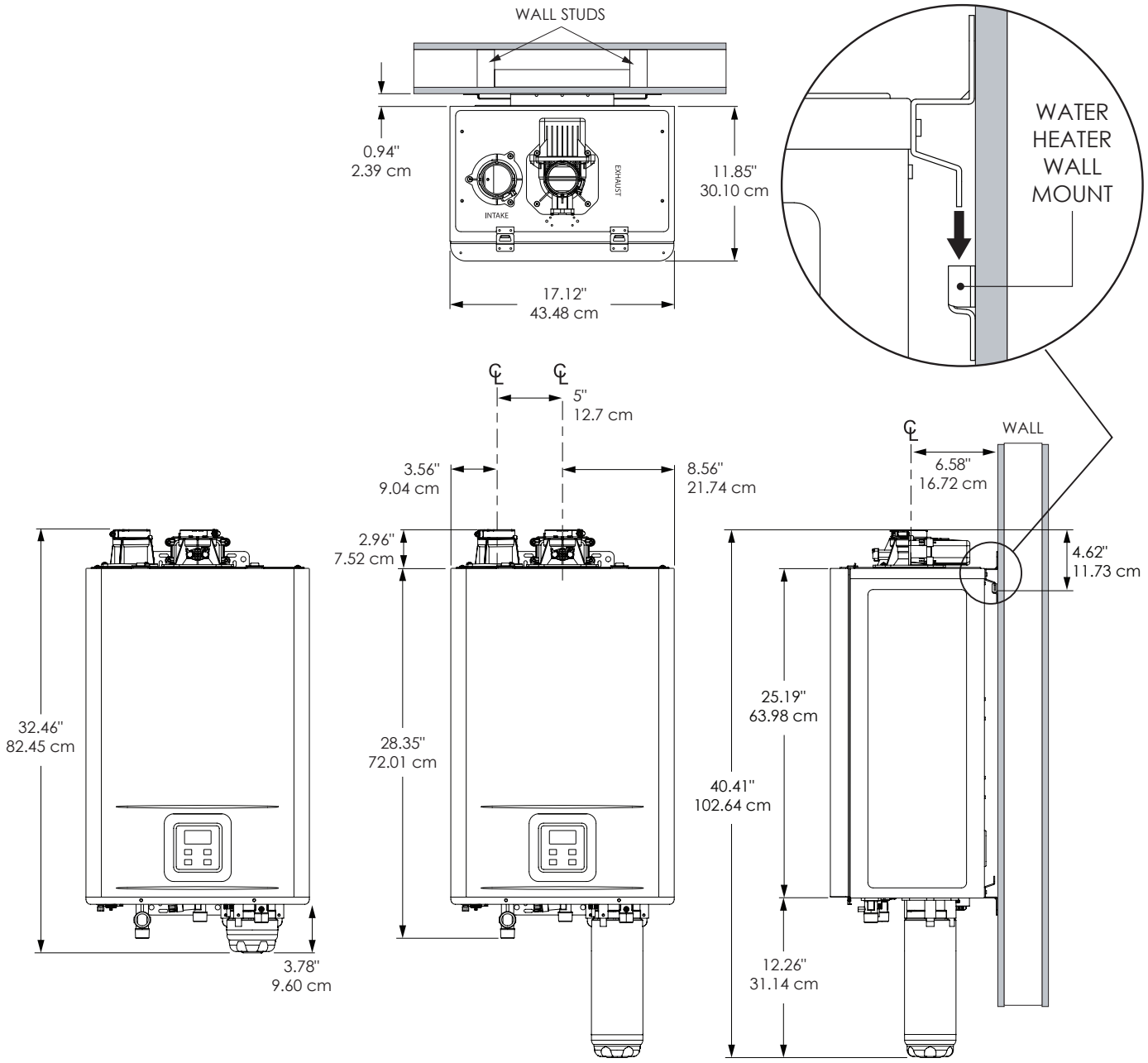
WALL STUDS
0.94"
2.39 cm
11.85"
30.10 cm
INTAKE
EXHAUST
17.12"
43.48 cm
WATER HEATER WALL MOUNT
5"
12.7 cm
3.56"
9.04 cm
8.56"
21.74 cm
2.96"
7.52 cm
WALL
6.58"
16.72 cm
4.62"
11.73 cm
32.46"
82.45 cm
28.35"
72.01 cm
25.19"
63.98 cm
40.41"
102.64 cm
3.78"
9.60 cm
12.26"
31.14 cm

Supply Connections

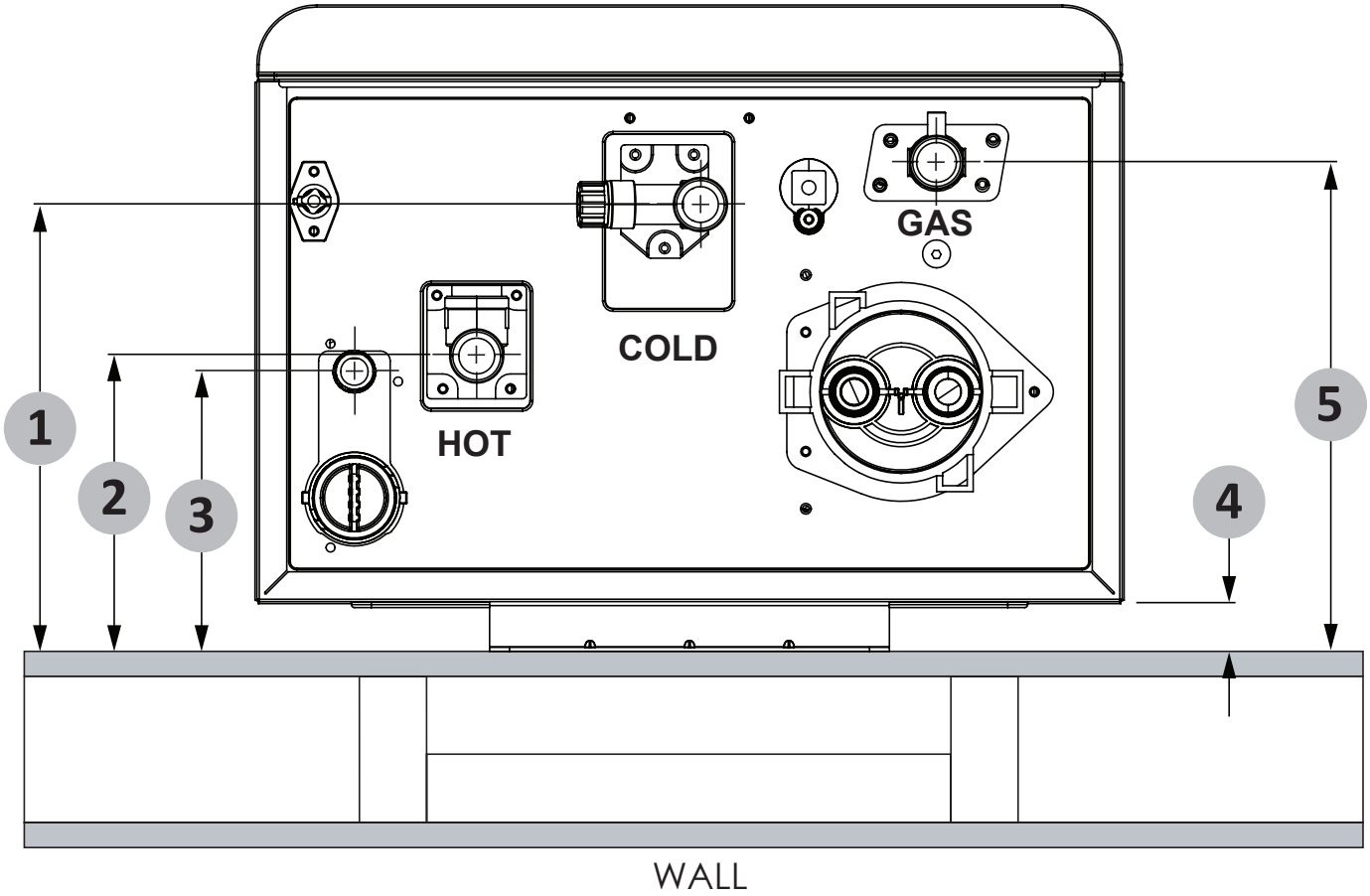

Table 1: Supply Connections

Item	Description	Dimensions	Connection Size
1	Cold Inlet	8.89 in/22.58 cm	3/4" MNPT
2	Hot Outlet	5.88 in/14.94 cm	3/4" MNPT
3	Condensate Connection	5.58 in/14.17 cm	1/2" MNPT
4	Wall Bracket	0.98 in/2.49 cm	N/A
5	Gas Inlet	9.72 in/24.69 cm	3/4" MNPT

Product Specification and Technical Data

X3® Models: Comes with the X3® Scale Prevention Technology cartridge and pressure relief valve installed.

M Models (Available in US Only): Comes with the Bypass cartridge installed.

Table 2: Specifications

Model		TM-160	TM-180	TM-199
Natural Gas Input (Minimum Operating Range)	BTU/H	10,000		
Natural Gas Input (Maximum Operating Range)	BTU/H	160,000	180,000	199,000
Gas Connection		3/4" NPT		
Water Connections		3/4" NPT		
Water Pressure*	psi (MPa)	15 - 150 (0.1 - 1)		
Water Flow Rate**	gpm (L/min)	0.26 - 10.5 (1.0 - 39.7), Activation Min: 0.4 (1.5)		
Natural Gas Inlet Pressure	inch W.C. (kPa)	Min: 4.0 (1.0) Max: 10.5 (2.62)		
Weight	lbs (kg)	83 (37.6)		
Dimensions (Including X3®)	inch	W 17.12 x H 40.41 x D 11.85		
	cm	W 43.48 x H 102.64 x D 30.10		
Ignition		Electronic Ignition		
Electric Supply		120 V, 60 Hz, <5 A		
Water Heater Category* **		Category IV		

*40 psi or above is recommended for maximum flow.
**Minimum activation flow rate may increase if energy demand required is below the minimum input rating of the water heater.
***Water Heater Category** - does not apply to Outdoor or Direct Vent installations.
Category IV - a water heater that operates with a positive vent static pressure and with a vent gas temperature that may cause excessive condensate production in the vent.

NOTES:

- Check the rating plate to ensure that this product matches your specifications. This water heater is designed for Natural Gas only.
- The manufacturer reserves the right to discontinue, or change at any time, specifications or designs without notice and without incurring obligation.

IMPORTANT SAFETY INFORMATION

Read and follow all safety messages and instructions in this manual.

This is the safety alert symbol. It is used to alert you to potential physical injury hazards. Obey all safety messages that follow this symbol to avoid possible property damage, serious injury or death. Do not remove any permanent instructions, labels, or the rating plate from either the outside of the water heater or on the inside of the access panels. Keep this manual near the water heater.

DANGER	**DANGER indicates a hazardous situation that, if not avoided, will result in death or serious injury.**
WARNING	**WARNING indicates a hazardous situation that, if not avoided, could result in death or serious injury.**
CAUTION	**CAUTION indicates a hazardous situation that, if not avoided, could result in minor or moderate injury.**
NOTICE	**NOTICE indicates practices not related to physical injury.**

⚠ WARNING! If the information in these instructions is not followed exactly, a fire or explosion may result causing property damage, personal injury or death. Do not store or use gasoline or other flammable vapors and liquids in the vicinity of this or any other appliance.

An odorant is added by the gas supplier to the gas used by this water heater. This odorant may fade over an extended period of time. Do not depend upon this odorant as an indication of leaking gas. We recommend installing a fuel gas and carbon monoxide detector.

This product is certified to comply with a maximum weighted average of 0.25% lead content as required in some areas.

Important information to keep

Fill out this section and keep this manual in the pocket of the water heater for reference.

Date Purchased:

Model Number:

Serial number:

Maintenance performed:*	Date:

**Operate the Pressure Relief Valve annually and inspect Pressure Relief Valve every 2-4 years (see the label on the Pressure Relief Valve for maintenance schedule). If no label is attached to the Pressure Relief Valve, follow the instructions in the Maintenance section of this manual. See the Regular Maintenance section for more information about maintaining this water heater.*

IMPORTANT SAFETY INFORMATION

To reduce the risk of property damage, serious injury or death, read and follow the precautions below, all labels on the water heater, and the safety messages and instructions throughout this manual.

RISKS DURING INSTALLATION AND MAINTENANCE

Lifting Risk

⚠ WARNING! The water heater is heavy. Follow these precautions to reduce the risk of property damage, injuries from lifting or impact injuries from dropping the water heater.

- Use at least two people to lift the water heater.
- Be sure you both have a good grip before lifting.
- Use an appliance dolly or hand truck to move the water heater.

Explosion Risk

⚠ WARNING! This water heater is designed for Natural Gas operation only. Refer to the water heater's rating plate. Failure to follow these instructions can result in serious injury or death from explosion, fire or carbon monoxide poisoning.

- **DO NOT** connect this Natural Gas water heater to an L.P. gas supply.
- Use a new gas supply line approved for Natural Gas that meets local and state/provincial codes.
- Install a full port shut-off valve on the gas supply line.
- Maintain the Pressure Relief Valve properly. Follow the maintenance instructions provided by the manufacturer of the Pressure Relief Valve (label attached to Pressure Relief Valve). If no label is attached to the Pressure Relief Valve, follow the instructions in the Pressure Relief Valve Maintenance section of this manual. An explosion could occur if the Pressure Relief Valve or discharge pipe is blocked. Do not cap or plug the Pressure Relief Valve or discharge pipe.

Gas Pressure

⚠ WARNING! The Natural Gas supply pressure must not exceed the maximum supply pressure as stated on the water heater's rating plate. Have a qualified person (licensed plumber, gas company personnel, or authorized service technician) check for proper gas pressure. Gas pressures exceeding the maximum supply pressure as stated on the water heater's rating plate can result in serious injury or death from explosion or fire.

RISKS DURING OPERATION

Scalding Risk

This water heater can make water hot enough to cause severe burns instantly, resulting in severe injury or death.

- Feel water before bathing or showering.
- To reduce the risk of scalding, install Thermostatic Mixing Valves (temperature limiting valves) at each point-of-use. These valves automatically mix hot and cold water to limit the temperature at the tap. Mixing valves are available at your local plumbing supplier. Follow the manufacturer's instructions for installation and adjustment of the valves.
- Water temperatures over 125°F (52°C) can cause severe burns instantly or death from scalding. The water temperature is set at 120°F (49°C) from the factory to minimize any scalding risk. Before bathing or showering, always check the water temperature. Higher temperatures increase the risk of scalding, but even at 120°F, hot water can scald. If you choose a higher temperature setting, Thermostatic Mixing Valves located at each point-of-use are particularly important to help avoid scalding.

Table 3: Scalding Table

Temperature	Time to Produce a Serious Burn
120°F (49°C)	More than 5 minutes
125°F (52°C)	1½ to 2 minutes
130°F (54°C)	About 30 seconds
135°F (57°C)	About 10 seconds
140°F (60°C)	Less than 5 seconds
145°F (63°C)	Less than 3 seconds
150°F (66°C)	About 1½ seconds
155°F (68°C)	About 1 second

For more information about changing the factory temperature setting, refer to the "Temperature Settings" section in this manual.

- Water temperature will be hotter if someone adjusted the set temperature to a higher setting.
- Should overheating occur or the burner fail to shut off, turn off the manual gas supply valve to the water heater and call a qualified person.

To reduce the risk of unusually hot water reaching the fixtures in the house, install Thermostatic Mixing Valves at each point-of-use.

If anyone in your home is at particular risk of scalding (for example, the elderly, children, or people with disabilities) or if there is a local code or state/provincial law requiring a certain water temperature at the hot water tap, these precautions are particularly important.

According to a national standard American Society of Sanitary Engineering (ASSE 1070) and most local plumbing codes, the water heater's thermostat should not be used as the sole means to regulate water temperature and avoid scalds.

Water Contamination Risk

Do not use chemicals that could contaminate the potable water supply. Do not use piping that has been treated with chromates, boiler seal, or other chemicals. Suitable for potable water heating only.

Fire Risk

To reduce the risk of a fire that could result in property damage, or serious injury or death:

- Do not store things that can burn easily such as paper or clothes next to the water heater.
- Do not store or use gasoline or other flammable substances in the vicinity of this or any other appliance.
- Do not use this appliance if any part has been in contact with or been immersed in water. Immediately call a qualified installer or service agency to replace a flooded water heater. Do not attempt to repair the unit. It must be replaced.

Explosion Risk

High pressures in the water heater can cause an explosion resulting in property damage, serious injury or death. A Pressure Relief Valve is required to be installed on the water heater. A Pressure Relief Valve is supplied with X3® models and shall be field supplied for M models. Additional pressure protective equipment may be required by local codes.

A nationally recognized testing laboratory maintains public inspection of the valve production process and certifies that it meets the requirements for Relief Valves for Hot Water Supply Systems, ANSI Z21.22. The Pressure Relief Valve's relief pressure must not exceed the working pressure rating of the water heater as stated on the rating plate.

Carbon Monoxide Risk

⚠ WARNING! This water heater operates by burning gas. Carbon monoxide is a colorless, odorless, gas that is a by-product of burning of fuels such as coal, wood, charcoal, oil, kerosene, propane, and natural gas. Breathing excessive and abnormal amounts of carbon monoxide can cause carbon monoxide poisoning, resulting in serious injury or death. This water heater must be supplied with adequate combustion air and must be properly vented to the outdoors. Have a qualified person (licensed plumber, authorized gas company personnel, or authorized service technician) install the venting system using these installation instructions.

Install a fuel gas and carbon monoxide detector in the living areas of your home.

Failure to follow these instructions can result in serious injury or death from carbon monoxide poisoning.

Read Before Installation

1 Review all of the instructions before you begin work. Improper installation can damage the water heater, your home and other property, and can present risks of serious injury or death.

2 This water heater is designed as a Category IV, positive vented static pressure water heater (vent gas temperatures may cause excessive condensate production in the vent), which takes its combustion air either from the installation area or from air ducted to the unit from the outside. This water heater must be installed:

- Following all local codes, or in the absence of local codes, follow the current edition of ANSI Z223.1/NFPA 54, National Fuel Gas Code in the USA or B149.1, Natural Gas and Propane Installation Code in Canada.
- For installation in manufactured homes (mobile homes) follow the current edition of The Manufactured Home Construction and Safety Standard, Title 24 CFR, Part 3280 and/or CSA Z240 MH Series, Manufactured Homes.
- Follow the electrical code requirements of the local authority having jurisdiction. In the absence of such requirements, follow the current edition of the National Electrical Code ANSI/NFPA 70 in the USA or the current edition of CSA C22.1 Canadian Electrical Code Part 1 in Canada.

This is available from the following:

CSA Group, Inc.
United States:
8501 East Pleasant Valley Road
Cleveland, OH 44131

Canada:
178 Rexdale Blvd.
Toronto, ON
Canada M9W 1R3

National Fire Protection Association
1 Batterymarch Park
Quincy, MA 02269

Check with local code officials about codes governing this installation. Have your installation inspected by a code official to ensure the installation meets all local codes.

NOTICE: Installation and service must be performed by a qualified installer (for example, a licensed plumber or gas fitter). Otherwise, the warranty will not apply. The installer (licensed professional) is responsible for the correct installation of the water heater and for compliance with all national, state/provincial, and local codes.

Massachusetts code requires this water heater to be installed in accordance with Massachusetts 248-CMR 2.00 and 248-CMR 5.00: State Plumbing Code. Other local and state authorities may have similar requirements or other codes applicable to the installation of this water heater.

3 Before you start, be sure to check the following:

⚠ WARNING! Do not store or use flammable materials, vapors, or liquids in the same location where this water heater is installed.

- All gas water heaters require correct installation to ensure safe and efficient operation. This manual must be followed exactly. Read the entire manual before installation and review the "Important Safety Information" section (see page 9).
- Carefully plan the installation location of the heater and vent terminations.
- The water heater must be installed where the proper amount of combustion air will be available to it at all times without obstructions. When installed indoors, the water heater can be direct vented.
- The length of piping between the water heater and fixture determines the time it takes for the hot water to arrive. Consider installing the water heater closer to fixtures if the plumbing system allows for it. The water heater should be the first appliance to access the water line after the utility water meter.
- Locate your water heater close to a drain where water leakage will not do damage to surrounding areas. As with any water heating appliance, the potential for leakage at some time in the life of the product does exist. A drain pan, or other means of protection against water damage, is recommended to be installed under the water heater in case of leaks to lessen the chance of sustaining property damage. In addition, you may install an active water leak detector with a shutoff valve which can turn off the water supply in the event of a leak. The manufacturer is not responsible for damage due to water leaks.
- The water heater shall be securely wall-mounted or mounted on a stand.
- Maintain proper space for servicing. Install the unit so that it can be connected or removed easily. Refer to the "Unit Clearances" section for proper clearances (see page 17).

NOTICE: For outdoor installations, locate the water heater in an open, un-roofed area. Maintain 3 inches (76 mm) minimum clearance from the left and right sides of the unit.

- The manufacturer does not recommend installing the water heater in an attic due to safety issues. See the installation section for further information.
- Failure to observe these warnings could result in severe personal injury, death, and/or property damage.

Venting/Combustion

- **DO NOT** install the water heater where water, debris or flammable vapors may get into the flue terminal. This may cause damage to the water heater and the warranty will not apply.
- **DO NOT** locate your heater in a pit or location where gas and water can accumulate.
- **DO NOT** install the unit where the exhaust vent is pointing into any opening in a building or where the noise may disturb your neighbors. Make sure the vent termination meets the required clearance from any doorway or opening to prevent exhaust from entering a building. Check local code requirements prior to installation.
- **DO NOT** install the exhaust vent for indoor and outdoor models within 3 feet (914 mm) of an overhang. Vent termination must be at least 2 ft (610 mm) away from an inside corner for both outdoor installation and direct-vent installation.

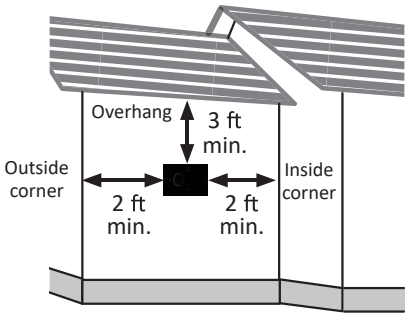

Figure 1 - Overhang and Inside Corner Restrictions

- **DO NOT** install next to a dryer or any source of airborne debris that can be trapped inside the combustion chamber unless the system is direct vented. When direct vented, do not install the air intake near the dryer vent or any source of airborne debris.
- **DO NOT** common vent this water heater with any other water heaters or appliances.

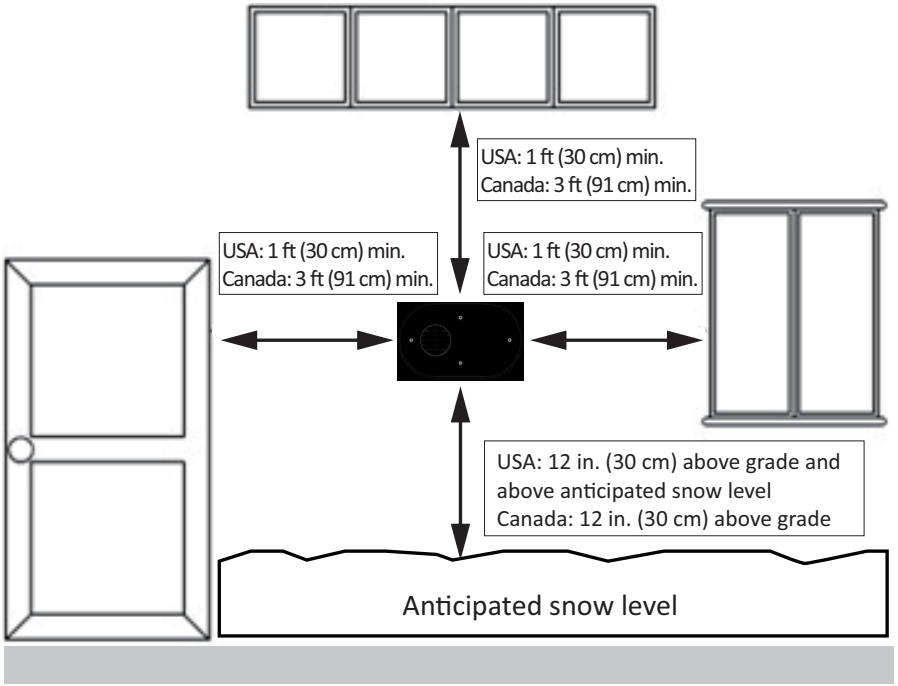

Figure 2 - Minimum Vent Clearance (Indoor Direct Venting)

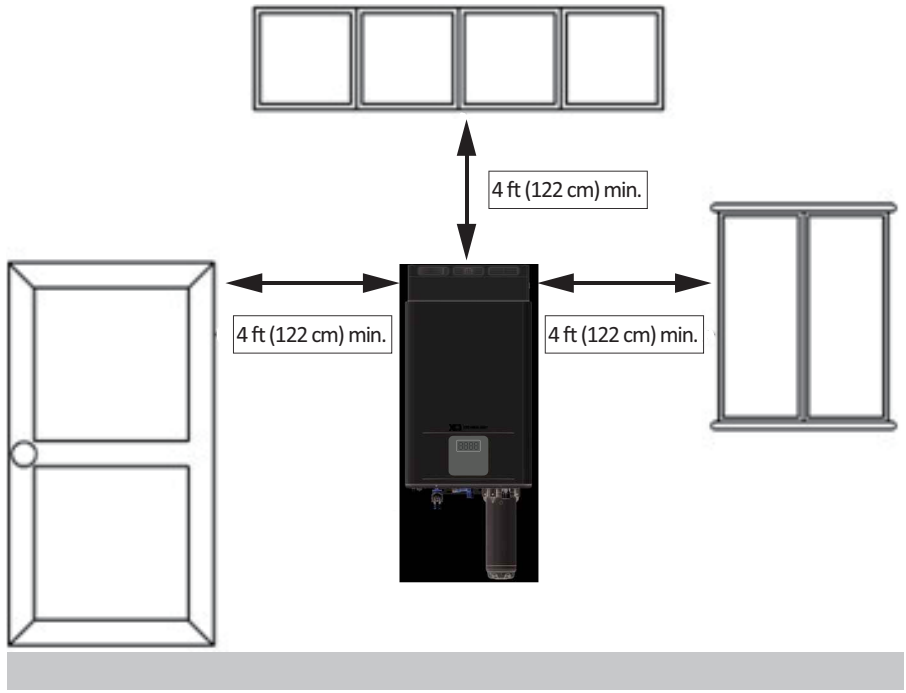

Figure 3 - Minimum Vent Clearances (Outdoor Venting)

Included Items

Table 4: Items Included with your Water Heater

Item	Product Image	Description	Configuration	
			X3	M
Manual	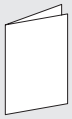	Installation Instructions and Use & Care Guide for TM-160, TM-180 & TM-199 series model water heaters.	√	√
Pressure Relief Valve	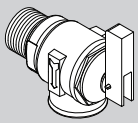	Pressure Relief Valve rated up to 150 psi and the maximum BTU/hr of the water heater. (Included with X3® models; Field supplied for M models)	√	
Wall Mounting Bracket	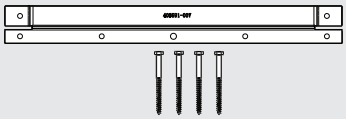	Kit for mounting water heater contains: • Mounting Bracket (1x) • 1/4 in x 3 in Lag Bolts (4x)	√	√
Screws for Vent Ports	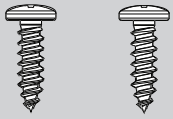	Screws to secure the vent piping to the vent ports. See "Installing the Vent Pipe" on page 22. • 3/16 in x 1/2 in Vent Screw (2x)	√	√
Bird Screen	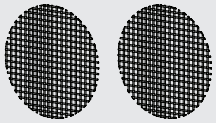	Bird screen to restrict small animals, birds, pests, and other foreign objects from entering the vent system. Kit contains 2 screens sized for 2 in vent elbows.	√	√
X3® Cartridge		Prevents scale buildup and eliminates the need for annual descaling maintenance.	√	
Bypass Cartridge	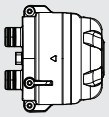	For M configuration water heaters without X3® scale reduction technology.		√
Cartridge Screws	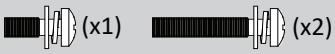	Screws to secure the X3®or Bypass Cartridge: • M4-12 mm (1x) • M4-25 mm (2x)	√	√
Cascading Cable	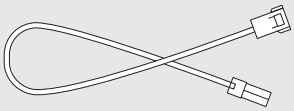	Cascading Cable for electronically connecting tankless water heaters in series for greater output: • P/N 100371915	√	√

Available Accessories

Table 5: Accessories Available for your Water Heater

Item	Product Image	Description
X3® Cartridge		Add to an M model heater to prevent scale buildup and eliminate the need for annual descaling maintenance: • P/N 100368986
Wi-Fi Module	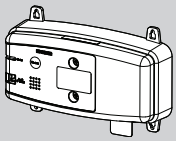	Wi-Fi Module for electronically connecting tankless water heaters to the internet and adapter to connect to the water heater: • P/N 100371922
Remote Temperature Controller	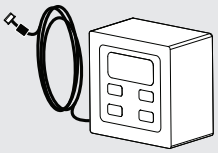	Remote Temperature Controller with 10 ft. (3m) cable: • P/N 100383909
Communication Cables	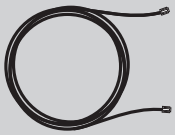	Communication Cable Extensions for Remote Temperature Controller, Wi-Fi Module, or On-Demand Receiver: • P/N 100377341 for 10 ft. (3 m) • P/N 100377342 for 32 ft. (10 m)
Cartridge Freeze Protection	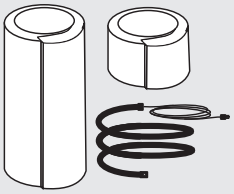	Cartridge Freeze Protection can add an extra layer of freeze protection to external cartridge: • P/N 100325654 for X3® models • P/N 100371918 for Bypass models
Pipe Cover	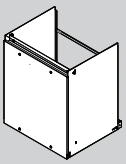	Pipe Cover protects plumbing connections to the heater while improving the appearance of the installation. Affixes to bottom of heater: • P/N 100383908
Neutralizer Assembly Kit		Neutralizer Assembly neutralizes the condensate (acidic water) that forms in the secondary heat exchanger of the water heater. It connects to the condensate drain port of the water heater by using connectors included with the neutralizer kit: • P/N 100112159

Table 5: Accessories Available for your Water Heater

Item	Product Image	Description
Outdoor Vent Cap Kit		Outdoor Installation kit containing the Outdoor Vent Cap and User Interface Cover: • P/N 100369060
Isolation Valve Kit with Pressure Relief Valve	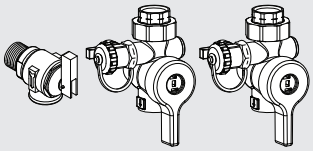	Isolation Valve supports routine maintenance and allows for draining and flushing the heater; whereas, the Pressure Relief Valve, as the name implies, serves to limit internal pressure in the system: • P/N 100112156

Recommended Tools and Materials

Before you start, be sure you have the following tools and supplies:

- Plumbing tools and supplies appropriate for the type of water pipes in your home.
- Thread sealant tape or pipe joint compound approved for potable water.
- Pipe dope approved for gas connections or gas type.
- For homes with water lines using threaded connectors suitable for the specific type of plastic pipe used: CPVC or PEX (cross-linked polyethylene). Do not use PVC pipe.
- Non-corrosive gas leak detection solution made from hand dishwashing soap mixed with water (1 part soap to 15 parts water) or children's soap bubbles and a small, soft-bristled brush or approved gas leak detection device.
- An appliance dolly or hand truck to move the water heater.

Recommended Accessories

- Automatic water leak detection and shut-off device
- Thermostatic Mixing Valves at each point-of-use
- Fuel gas and carbon monoxide detector

Installation Environment

Proper Mounting and Clearance

The water heater shall be securely mounted on a wall that can support the weight of the water heater. A wall mounting bracket is supplied with the water heater to securely mount the water heater to wall studs. The water line, gas line, condensate drain line, and pressure relief valve discharge line shall be supported using field supplied pipe hangers. The water heater shall not bear the weight of these lines. The water heater requires proper installation clearance for operation and service as described in "Unit Clearances" on the right.

⚠ WARNING! The installer (licensed professional) is responsible for the correct installation of the water heater and for compliance with all national, state/provincial, and local codes.

Atmosphere Temperature

Install the water heater in a heated area where below freezing temperatures cannot occur. A pipe cover is recommended when the water heater is installed outdoors because it provides better protection from the elements. The warranty will not be covered if the water heater is damaged due to freezing. See "Freeze Protection System" on page 53.

Combustion Air Supply

The water heater requires fresh combustion air and should be free of corrosive elements and flammable vapors. If it is installed in a contaminated or confined area, direct venting installation is recommended.

Proper Ventilation

For proper operation the water heater must be vented in accordance with the section "Venting" of the current edition of the ANSI Z223.1/NFPA 54, National Fuel Gas Code in the United States and/or Section 8 of the B149.1, Natural Gas and Propane Installation Code in Canada, as well as applicable local building codes.

Condensate Drain Line

The condensate produced is acidic. Drain the condensate in accordance with all local codes and common safety practices.

Unit Clearances

⚠ WARNING! Maintain all clearances around the water heater. Failure to do so could create a fire hazard, potentially leading to death, serious injury, and/or property damage.

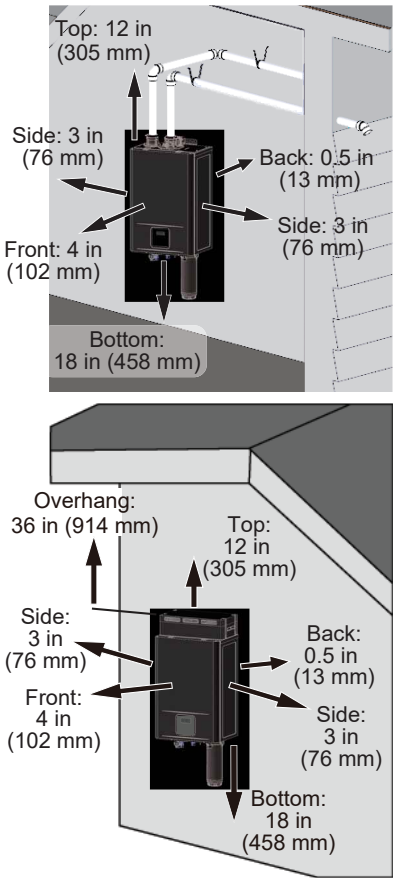

Figure 4 - Indoor/Outdoor Clearances

NOTICE: It is recommended that the front should have 24 inches (610 mm) of clearance for maintenance.

Mounting the Water Heater

1. Secure the wall mounting bracket with the four supplied lag bolts to the wall studs. See Figure 5. **DO NOT** secure to drywall only.

NOTICE: The supplied fasteners are for wood studs only. When mounting on any other surface, use fasteners approved for that wall material/construction. Make sure to level the bracket.

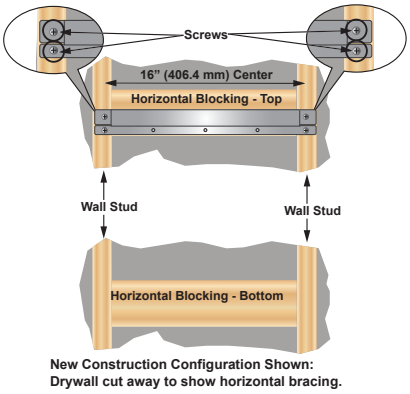

Figure 5 - Wall Bracket Installation

2. Hang the heater on the mounting bracket (Figure 6).

Figure 6 - Use Mounting Screws to Secure Water Heater to Bracket

3. Secure the water heater firmly, fastening the appropriate screws for wall construction into the upper and bottom brackets of the water heater and wall. **NOTICE:** These screws are not provided.

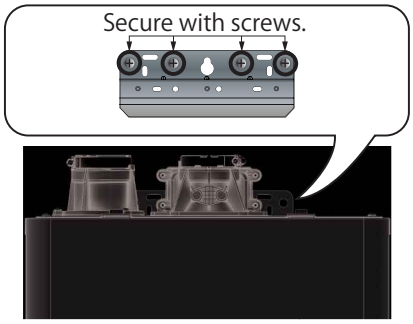

Figure 7 - Use Mounting Screws to Secure Water Heater to Bracket

Combustion and Venting Installation

Combustion Air

Before installing the water heater, you must determine the amount of air needed to supply this water heater and any other gas appliances in the same area and provide adequate air for combustion and ventilation. This section does not apply if the water heater is direct vented. Consult a qualified person if you are unsure of the proper way to supply air to your water heater.

⚠ WARNING! This gas water heater requires an adequate source of clean air for combustion and ventilation. Without sufficient air, your water heater will have frequent outages and may emit excessive and abnormal amounts of carbon monoxide.

Before beginning:

Calculate total BTU/hr rating of all appliances.

To calculate the combustion air and ventilation required, add up the total BTU/hr ratings of all gas burning appliances (e.g., water heaters, furnaces, clothes dryers) in the same area.

Your water heater's BTU/hr rating is on the rating plate, located on the side of the water heater. The BTU/hr ratings should be on the other appliances' rating plates. If you have trouble determining the BTU/hr ratings, contact the manufacturer or have a qualified person determine the ventilation requirements.

NOTICE: If you are replacing your old water heater with one that has a higher BTU/hr rating, the amount of ventilation required may be greater.

Example:

Gas Burning Appliance	BTU/hr Rating
Gas Water Heater	199,000
Furnace	75,000
Dryer	20,000
Total	294,000

Your Appliances:

Gas Burning Appliance	BTU/hr Rating
Gas Water Heater	
Total	

Option A: Installation without outside ventilation (not recommended)

Ventilation with outside air is recommended for all installations. Even if the water heater is installed in a large, open room inside the house, outdoor air is usually needed because modern homes are very tightly sealed and often do not supply enough air to the water heater. However, when installed in a large indoor space, it may be possible to provide enough air without outside ventilation. If you are unsure if your installation location has enough ventilation, contact your local gas utility company or code officials for a safety inspection.

The following instructions will help determine if it may be possible to install without outside ventilation. If there is not enough ventilation, you will need to ventilate with outside air.

Check for Chemicals:

Installations where corrosive chemicals may be present require outside air. Air for combustion and ventilation must be clean and free of corrosive or acid-forming chemicals such as sulfur, fluorine, and chlorine. Ventilation with outside air will reduce these chemicals, but it may not completely eliminate them. Failure due to corrosive chemicals is not covered by the warranty. Examples of locations that require outside air due to chemicals include:

- Beauty salons
- Photo processing labs
- Indoor pools
- Laundry, hobby, or craft rooms
- Chemical storage areas

Products such as aerosol sprays, detergents, bleaches, cleaning solvents, gasoline, air fresheners, paint and varnish removers, and refrigerants should not be stored or used near the water heater.

A1: Calculate the air volume of the room

Air requirements depend on the size of the room.

Floor Area (square feet) x Ceiling Height (feet) = Room Volume (cubic feet)

If there are large objects in the room (e.g., refrigerator, furnace, car), subtract their volume from the volume of the room to get a better estimate of the air available.

Room Volume – Object Volume = Air Volume

A2: Calculate required air volume

A water heater installed in an unconfined space, such as an attic or garage, requires that the space be at least 50 cubic feet per 1,000 BTU/hr of the total input for all gas burning appliances in the same area.

[Total BTU/hr/1000] x 50 = Cubic feet of air required.

Example:

(294,000 / 1000) x 50 = 14,700

If the air volume of the room is less than the required air volume, you must provide two permanent outside air openings that draw in sufficient air. Use Option B.

If the air volume of the room is greater than the required air volume, it may be possible to install the water heater without outside ventilation.

A3: Check that combustion ventilation is adequate

Because modern homes are often well-sealed to prevent drafts, a large room may not provide enough combustion air without ventilation. Confirm that your installation has enough combustion air.

Option B: Installation with outside ventilation

Ventilation with outside air is recommended, and for most installations, is needed. There may be existing ventilation that is adequate, or you may need to add more ventilation.

Supplying outside air typically requires two openings. One opening must be within 12 inches from the floor and the second opening must be within 12 inches from the ceiling. Although a single opening is not preferred, you may use a single opening to outside air if the minimum free area is sized according to Table 6 (see page 20). Two openings must be used when ventilating with air from another room.

B1: Determine type of ventilation

There are several types of ventilation that can be used:

1. Direct to outdoors
2. Vertical ducts
3. Horizontal ducts
4. Single opening (not recommended); must be at least 100 square inches. Not appropriate for confined spaces smaller than 50 cubic feet per 1,000 Btu/hr as calculated in section A or when getting air from another room.
5. From a larger room inside the house (not recommended — refer to section A to determine if the combined volume of the room may be adequate)

B2: Determine minimum free area required for each vent opening

The size of the vent openings depends on the total BTU/hr rating of all appliances in the space (use your calculation from “Before Beginning”) and the type of vent used. Table 6 provides the minimum free area for each vent opening depending on the type of ventilation.

B3: Calculate minimum size of vent openings and ducts

The vent cross-sectional area needed to provide the free area depends on the covering on the vent openings. Typical vents use louvers or grilles to protect the opening. The louver or grille itself blocks some of the free area, so the opening may need to be larger to meet the minimum free area requirements.

Use the following formula to calculate the required cross-sectional area:

Cross-sectional area = minimum free area required ÷ percent free area of covering (in decimals – e.g., 60% = .6)

For example, an installation area that requires openings with 100 square inches of free area would need 134 square inch openings if using metal louvers rated at 75% free area (100 sq. in. ÷ .75 = 134 sq. in.).

If you do not know the % free area for your louver or grille, use the following values:

- For wood louvers or grilles: 20%
- For metal louvers or grilles: 60%

Follow these rules to ensure that vents and ducts provide adequate air flow:

- Each vent opening must be no smaller than 100 square inches.
- Ducts must have the same cross-sectional area as free area of the opening.
- Rectangular ducts must have a minimum dimension of no less than three inches.
- All screens must have mesh 1/4 inch or larger.
- Movable louvers must be locked open or interconnected with the equipment so that they open automatically during operation.
- Keep louvers and grilles clean and free of debris or other obstructions.

B4: Check that air source is clean and free of chemicals

Air for combustion and ventilation must be clean and free of corrosive or flammable chemicals. A failure due to corrosive chemicals in the air is not covered by the warranty. Combustion air must be free of acid-forming chemicals such as sulfur, fluorine, and chlorine. Be sure that air at the vent inlets is free of such chemicals.

B5: Check that combustion ventilation is adequate

Confirm that your installation has enough combustion air.

Combustion Air Supply Options

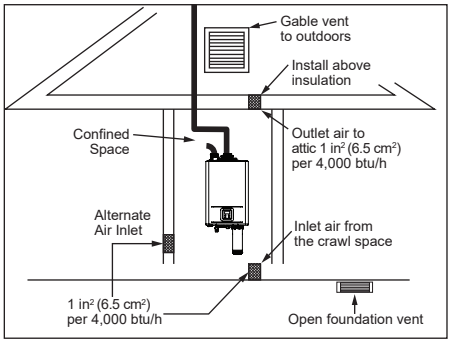

Figure 8 - Direct to Outdoor Openings

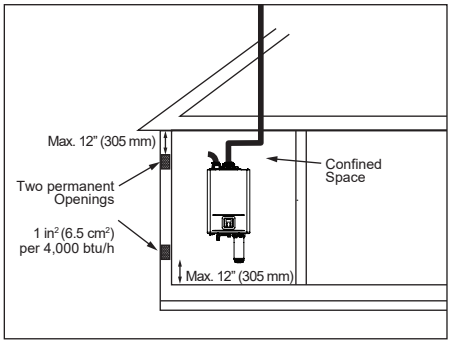

Figure 9 - Direct to Outdoor Openings with Two Permanent Openings

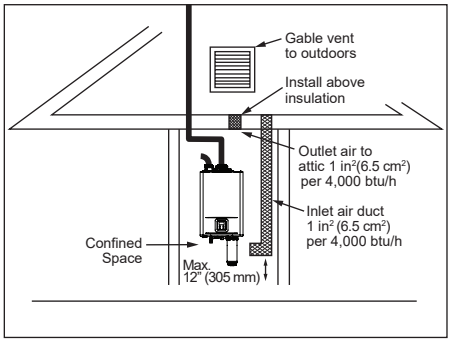

Figure 10 - Vertical Duct Openings

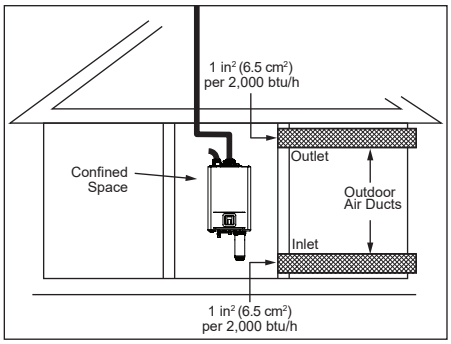

Figure 11 - Horizontal Duct Openings

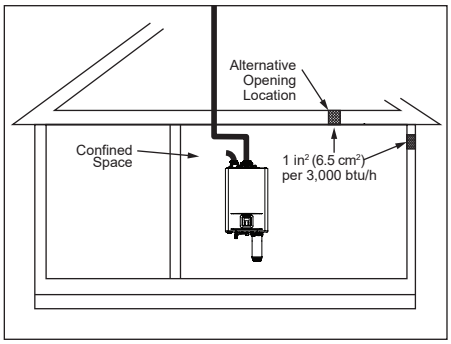

Figure 12 - Single Opening

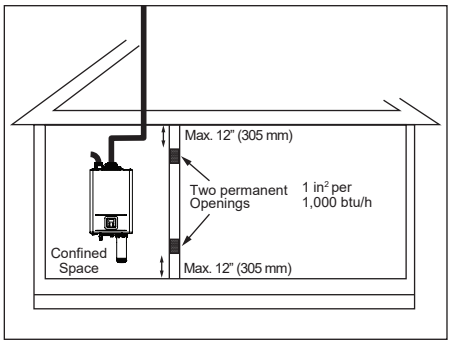

Figure 13 - Two Permanent Openings

Table 6:

Minimum Free Area of Permanent Openings for Ventilation and Combustion Air Supply – Air from outdoor or indoor spaces. Based on the total BTU/hr input rating for all gas burning appliances within a confined space.	
Opening Source	**Minimum Free Area**
Direct to Outdoors*	1 in² (6.5 cm²) per 4,000 BTU/hr (see Figure 8 & 9)
Vertical Ducts	1 in² (6.5 cm²) per 4,000 BTU/hr (see Figure 10)
Horizontal Ducts	1 in² (6.5 cm²) per 2,000 BTU/hr (see Figure 11)
Single Opening	1 in² (6.5 cm²) per 3,000 BTU/hr (see Figure 12)
Two Permanent Openings to Another Room**	1 in² (6.5 cm²) per 1,000 BTU/hr (see Figure 13) Opening: 100 in² (645 cm²) Min. Minimum dimension of air openings: no less than 3 inches (76 mm)

*These openings connect directly with the outdoors through a ventilated attic, a ventilated crawl space, or through an outside wall.
**United States: For direction on combining spaces in different stories within the structure, refer to the current edition of the National Fuel Gas Code ANSI Z223.1/NFPA 54. In Canada, follow B149.1, Natural Gas and Propane Installation Code.

Venting

⚠ WARNING! Carbon Monoxide Hazard. This water heater must be supplied with adequate air and vented to outdoors. The vent system must be installed by a qualified person. Examples of a qualified person include gas technicians, authorized gas company personnel, and authorized service technicians. Failure to properly vent the water heater can result in severe injury or death from carbon monoxide poisoning.

The Indoor model must be vented in accordance with the current edition of ANSI Z223.1/NFPA 54, National Fuel Gas Code in the USA or B149.1, Natural Gas and Propane Installation Code in Canada, as well as applicable local building codes.

The use of venting materials approved for Category III/IV appliances is recommended whenever possible. However, the Indoor model may also be vented with plastic pipe materials such as ABS, PVC (solid core), CPVC (solid core), or polypropylene. For details, please refer to the Exhaust Vent Section on page 24. Vent installations in Canada which utilize plastic vent systems must use venting that complies with ULC S636.

Venting may not intermingle with other manufactured material types, other than approved adapters.

General Rules for Venting Water Heaters:

- Follow the vent pipe's manufacturer's instructions when installing the vent pipe.
- Place the water heater as close as possible to the vent termination.
- The vent collar of the water heater must be fastened directly to an unobstructed vent pipe.
- Do not weld, glue or permanently bond the vent pipe to the water heater's vent collar.
- Do not cut or alter the vent collar of the unit.
- The vent must be easily removable from the top of the water heater for normal service and inspection of the unit and vent system.
- The water heater vent must not be common vented to any other gas appliance or vent stack.
- Air supply pipe can be made of ABS, PVC (solid core), CPVC (solid core), polypropylene, or Category lll/IV stainless steel.
- Use of cellular core PVC (ASTM F891), cellular core CPVC, or Radel® (polyphenylsulfone) in nonmetallic venting systems is prohibited.
- Covering non-metallic vent pipe and fittings with thermal insulation is prohibited.
- Sidewall venting is recommended for the Indoor model. Vertical venting (roof termination) is acceptable.
- The manufacturer recommends running the exhaust vent and the intake pipe as parallel as possible.
- For rooftop venting, a rain cap or other form of termination that prevents rainwater from entering into the water heater must be installed.
- Do not terminate vent into a chimney. If the vent must go through the chimney, the vent must run all the way through the chimney with approved vent pipe.
- The water heater shall not be connected to a chimney flue serving a separate appliance, designed to burn solid fuel.

General Rules for Vent Terminations:

- Avoid locating the water heater vent termination near any air intake devices. These fans can pick up the exhaust flue products from the water heater and return them to the building. This can create a health hazard.
- Locate the vent termination so that it cannot be blocked by any debris, at any time. Most codes require that the termination be at least 12 inches (305 mm) above grade and anticipated snow level, but the installer may determine if it should be higher depending on the job site condition and applicable codes.
- A proper sidewall termination is recommended when the water heater is vented through a sidewall.
- Check the clearances from the exhaust termination to the air inlet or opening.
- To reduce the risk of carbon monoxide poisoning, install a fuel gas and carbon monoxide detector. Install and maintain the detector in accordance with the manufacturer's instructions and local codes.

Replacing a Water Heater Using the Existing Vent System

⚠ WARNING! Improper venting of this appliance can result in excessive levels of carbon monoxide which can result in severe personal injury or death. Improper installation can cause nausea or asphyxiation, severe injury or death from carbon monoxide and flue gases poisoning. The product warranty will not apply to improper installations.

DO NOT use Category I or Category II venting system with this water heater.

If existing venting and vent terminations are used, they **MUST** be cleared of **ALL** restrictions, such as a restrictor plate, for proper operation.

Read the “Installing Vent Pipe” section of this manual and make sure your vent system is properly installed. Inspect the existing vent system for obstructions, corrosion, and proper installation. Repair or replace if necessary.

Table 7: Acceptable Plastic Vent Pipe Table

Item	Material	United States	Canada
Exhaust Pipe and Fittings	Schedule 40 PVC	ANSI/ASTM D1785	ULC S636 Certified Materials Only
	PVC-DWV	ANSI/ASTM D2665	
	Schedule 40 CPVC	ANSI/ASTM F441	
	Schedule 40 ABS-DWV	ANSI/ASTM D2661	
	Polypropylene	UL-1738	
Pipe Cement/ Primer	PVC	ANSI/ASTM D2564	ULC S636 Certified Materials Only
	CPVC	ANSI/ASTM F493	
	ABS	ANSI/ASTM D2235	
Use of cellular core PVC (ASTM F891), cellular core CPVC, or Radel® (polyphenylsulfone) in non-metallic venting systems is prohibited. Covering non-metallic vent pipe and fittings with thermal insulation is prohibited.			

NOTE: Approved vent and air intake polypropylene vent materials: Centrotherm InnoFlue® Single Wall Vent System.

Table 8: Maximum Vent Length with Elbows

Number of Elbows	Maximum Vertical or Horizontal Vent Length	
	0 to 7,800 ft. (0 to 2,377 m)	
	2 Inch Venting (50 ft. / 15.3 m)	3 Inch Venting (150 ft. / 45.7 m)
0	50 ft. (15.3 m)	150 ft. (45.7 m)
1	47 ft. (14.3 m)	147 ft. (44.8 m)
2	44 ft. (13.4 m)	144 ft. (43.9 m)
3	41 ft. (12.5 m)	141 ft. (43.0 m)
4	38 ft. (11.6 m)	138 ft. (42.1 m)
5	35 ft. (10.7 m)	135 ft. (41.1 m)

- For details on the vent connection, refer to "Installing the Vent Pipe" on page 23.
- For each elbow added, deduct 3 ft. (0.9 m) length for the elbow from maximum vent length.
- Total vent length will be used to configure the water heater after installation. See "Configuration Mode (C Mode)" on pages 50-51.

Installing the Vent Pipe

⚠ WARNING! Improper installation can cause nausea or asphyxiation, severe injury or death from carbon monoxide and flue gases poisoning. The product warranty will not apply to improper installations.

- When inserting the pipe into the exhaust/intake port, make sure that the pipe end is cut straight and positioned properly under the O-ring to seal the connection firmly.
- Improper venting of this appliance can result in excessive levels of carbon monoxide which can result in severe personal injury or death.

Vent Piping

1 Insert 2 inch straight pipe into the exhaust/intake ports until fully seated (Figure 14). The pipes will insert at a minimum of 1.5 inches (38 mm).

NOTICE: Air Intake for 2 inch Power Vent Installs: Insert the male end of a 2 inch long sweep street elbow into the heater's air intake port.

⚠ WARNING! The exhaust vent pipe connection to the water heater must be flush to maintain a proper seal. Check pipe for a 90° edge before installation. DO NOT use a field cut end for the connection. Failure to follow these instructions can cause carbon monoxide poisoning or death.

For 3 inch piping, install a 2 inch x 3 inch increaser to convert to 3 inch venting. A 12 inch (305 mm) maximum length straight pipe may be used to fit a 2 inch x 3 inch increaser (Figures 16 & 17).

2 Use a Phillips screwdriver to tighten the clamps (Figure 15).

3 Use the specified self-tapping screws to secure the venting to the intake and exhaust ports (Figure 15).

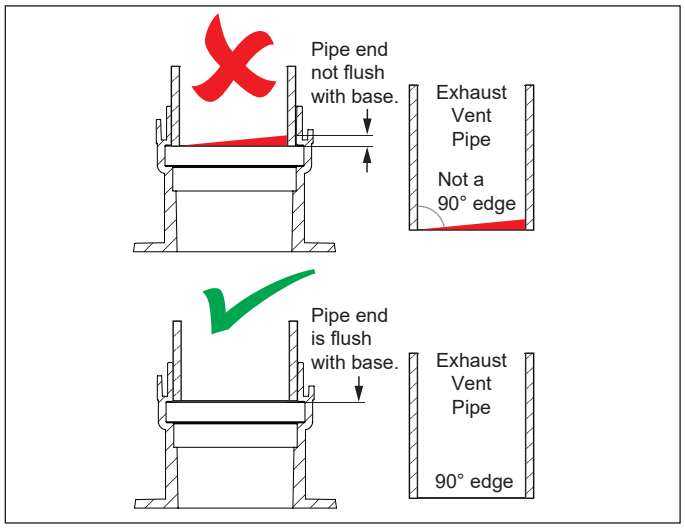

Figure 14 - Insert Straight Pipe

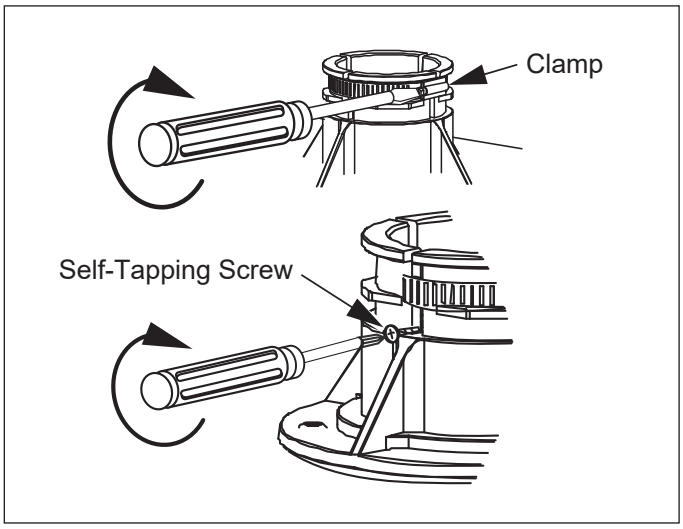

Figure 15 - Secure Venting

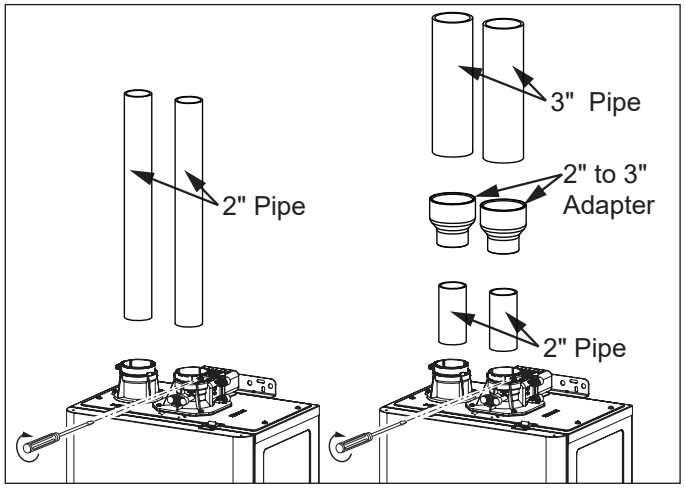

Figure 16 - Direct Vent Installation

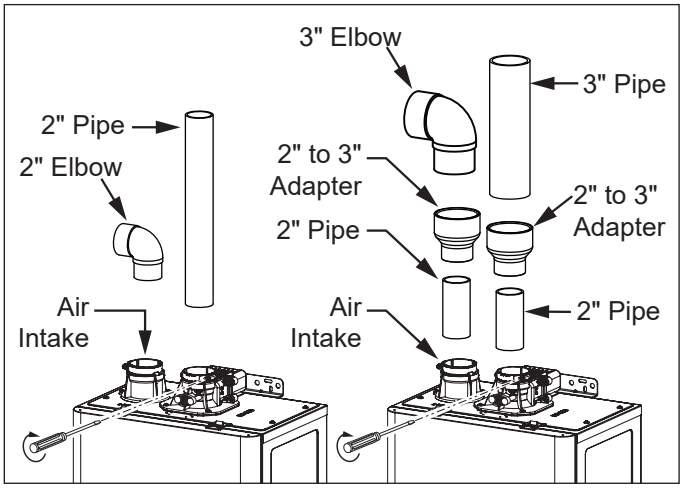

Figure 17 - Power Vent Installation

Exhaust Vent for Indoor Installation

ABS, PVC, CPVC or Polypropylene vent

The Indoor model can be vented with ABS, PVC (temperature rated up to 149°F/65°C), CPVC or polypropylene. In Canada, plastic venting must be certified to ULC S636 standards.

- The maximum length of the exhaust venting and intake piping shall not exceed the lengths listed in Table 8.
- **DO NOT** use more than 5 elbows in a vent system. 2 inch and 3 inch 90° elbows are equivalent to a vent length of 3 ft. (0.9 m). 2 inch and 3 inch 45° elbows are equivalent to a vent length of 1 ft. (0.3 m). If an elbow is used in the vent system, deduct each equivalent length from the maximum vent length to decide the total vent lengths.
- When the horizontal vent run exceeds 5 ft. (1.5 m), support the vent run at 3 ft. (0.9 m) intervals with overhead hangers.
- In areas of high rainfall, the installation of the rain trap may be necessary.
- Slope horizontal venting sections 1/4 inch (6 mm) upwards for every 12 inches (305 mm) toward the termination or according to local or state/provincial codes, or in the absence of local or state/provincial codes, the current edition of ANSI Z223.1/NFPA 54, National Fuel Gas Code in the USA or B149.1, Natural Gas and Propane Installation Code in Canada, as well as applicable local building codes.
- Do not use tight 90° elbows. Standard and long sweep elbows are acceptable. See Figure 18.

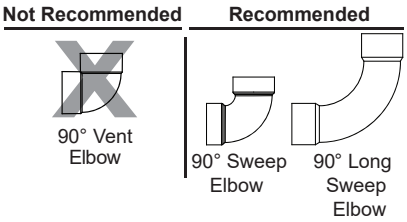

Figure 18 - Acceptable/Unacceptable Elbows

Input Rate at Maximum Vent Length

The manufacturer recommends using the shortest vent length possible to install the water heater. Pressure drop across ventilation at maximum vent length will decrease the input rate of the water heater.

NOTICE: Table 9 describes the input derate at maximum vent length per vent sizing.

Table 9: Input Decrease at Maximum Vent Length

Model	Vent Size	Derate at Max. Vent Length
TM-160	2 Inch	25%
	3 Inch	20%
TM-180	2 Inch	30%
	3 Inch	25%
TM-199	2 Inch	45%
	3 Inch	25%

Typical PDV Configurations:

The following are typical venting configuration examples for Power Direct Vent (PDV) applications.

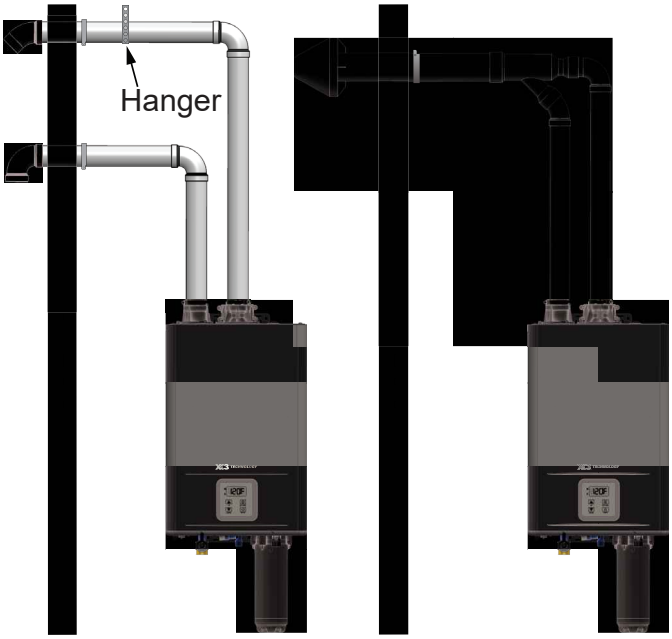

Figure 19 - Power Direct Vent Horizontal Installation

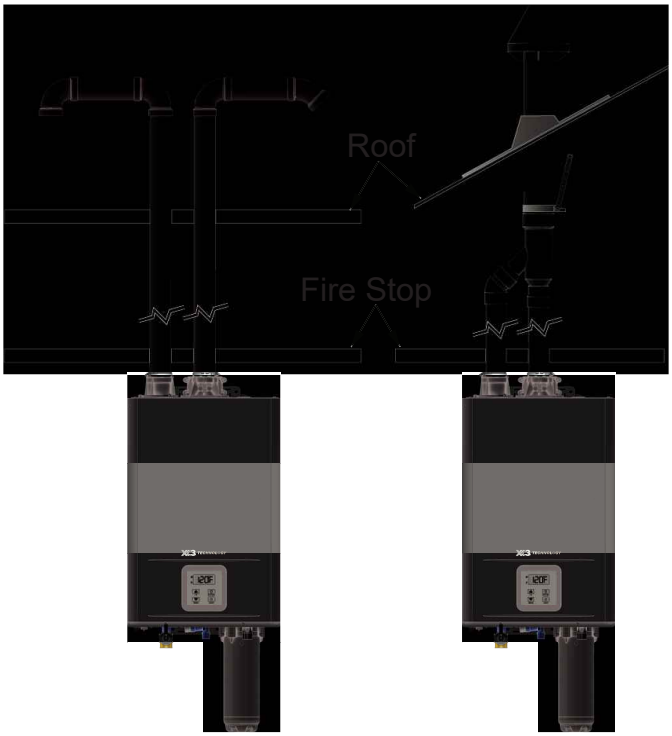

Figure 20 - Power Direct Vent Vertical Installation

Typical PV Configurations:

The following are typical venting configuration examples for Power Vent (PV) applications.

Figure 21 - Power Vent Horizontal Installation

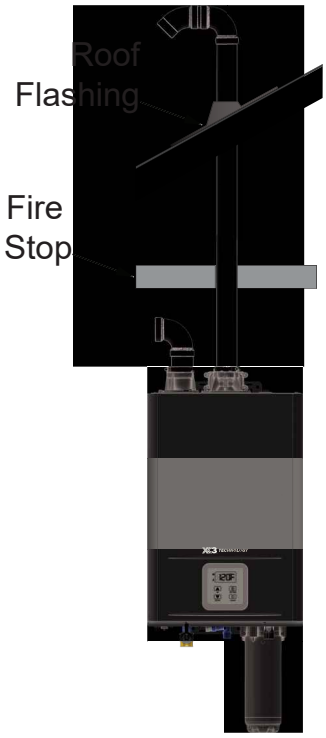

Figure 22 - Power Vent Vertical Installation

Vent Terminations

Table 10: PVC Vent Terminations and Venting Components

PVC LOW PROFILE TERMINATION

If termination is used in vertical position, the exhaust port must be oriented at the top.

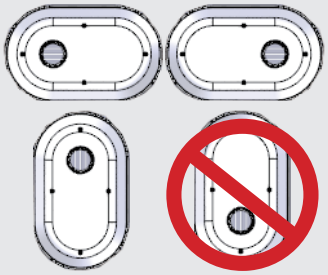

Vent Pipe Size	PVC Kit Number	IPEX Part Number	IPEX System 1738 ® PVC Part Number	*Equivalent Length
2" Low Profile	100187903	196984	397984	1 ft.
3" Low Profile	100187887	196985	397985	1 ft.

PVC CONCENTRIC TERMINATION

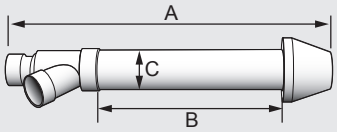

	A	B	C
FGV 2"	29”	16"	2"
FGV 3"	36”	20"	3"

Vent Pipe Size	PVC Kit Number	IPEX PVC Part Number	IPEX System 1738 ® PVC Part Number	IPEX System 636® CPVC Part Number	*Equivalent Length
2" FGV	100112869	196005	397005	197040	7 ft.
3" FGV	100112163	196006	397006	197006	23 ft.
3" Low Profile Termination			ISLPT0303		5 ft.

Table 11: Polypropylene Vent Terminations and Venting Components

POLYPROPYLENE CONCENTRIC TERMINATION

Vent Pipe Size	Centrotherm Part Number	*Equivalent Length
2" Low Profile Termination	ISLPT0202	6 ft.
3" Low Profile Termination	ISLPT0303	5 ft.

Table 11: Polypropylene Vent Terminations and Venting Components

POLYPROPYLENE RADIUS ELBOWS

Vent Pipe Size	Centrotherm Part Number	*Equivalent Length
2" 45° Exhaust Elbow	ISELS0245UV	2 ft.
3" 45° Exhaust Elbow	ISELS0345UV	2 ft.
2" 87° Inlet Elbow	ISELS0287UV	3 ft.
3" 87° Inlet Elbow	ISELS0387UV	3 ft.

POLYPROPYLENE CONCENTRIC WALL TERMINATION

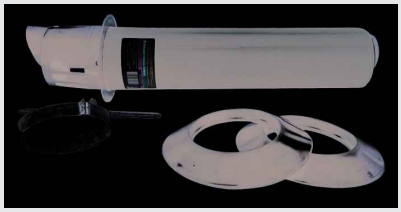

(ICWT242)

(ICTCR24)

Vent Pipe Size	Centrotherm Part Number(s)	*Equivalent Length
2"	ICWT242, ICTCR24	12 ft.

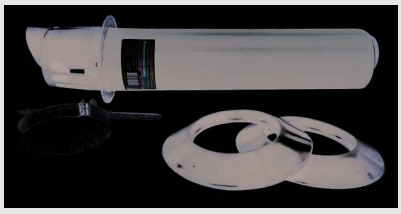

(ICWT352)

(ICCT3503)

Vent Pipe Size	Centrotherm Part Number(s)	*Equivalent Length
3"	ICWT352, ICCT3503	9 ft.

***IMPORTANT!:** Do not exceed 50 ft. (15.3 m) for 2 inch venting or 150 ft. (45.7 m) for 3 inch venting. Each elbow added is the equivalent length of 3 ft. for both 2 inch and 3 inch venting. Make note of total vent length for your application, including vent termination. See "Configuration Mode (C Mode)" on pages 50-51.

Vent Termination Clearances

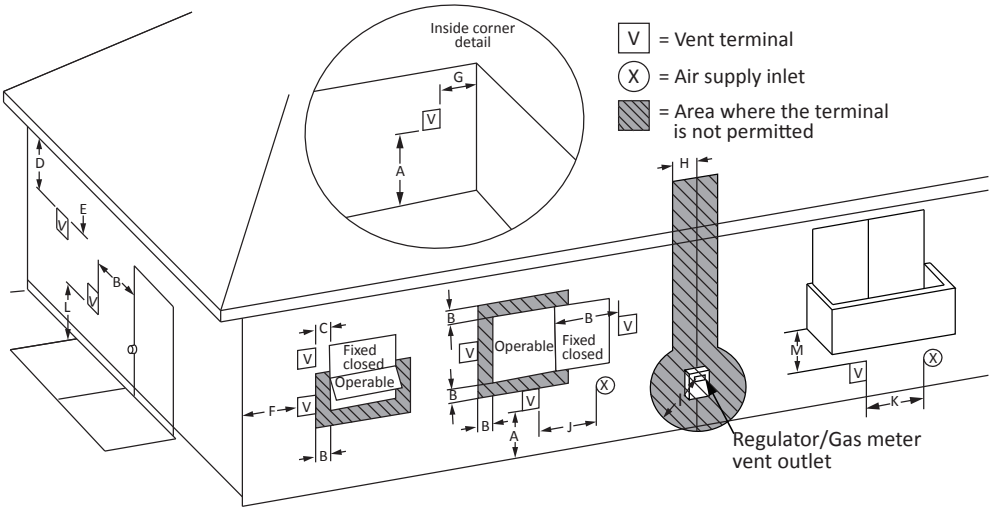

Table 12: Vent Termination Clearances

		Canada Installations[1]	US Installations[2]	
		Direct Vent and Other than Direct Vent	Direct Vent	Other than Direct Vent
A	Clearance above grade, veranda, porch, deck, or balcony	1 ft (30 cm)	1 ft (30 cm)	
B	Clearance to window or door that may be opened	3 ft (30 cm)	1 ft (30 cm)	4 ft (1.2 m) below or to side of opening; 1 ft (30 cm) above opening
C	Clearance to permanently closed window	0	0	0
D	Vertical clearance to ventilated soffit located above the terminal within a horizontal distance of 2 ft (61 cm) from the center line of the terminal	3 ft (91 cm)	3 ft (91 cm)	3 ft (91 cm)
E	Clearance to unventilated soffit	3 ft (91 cm)	3 ft (91 cm)	3 ft (91 cm)
F	Clearance to outside corner	2 ft (61 cm)	2 ft (61 cm)	2 ft (61 cm)
G	Clearance to inside corner	2 ft (61 cm)	2 ft (61 cm)	2 ft (61 cm)
H	Clearance to each side of center line extended above meter/regulator assembly	3 ft (91 cm)	*	*
I	Clearance to service regulator vent outlet	Above a regulator within 3 ft (91 cm) horizontally of the vertical center line of the regulator vent outlet to a maximum vertical distance of 15 ft (4.5 m)	*	*
J	Clearance to non-mechanical air supply inlet to a building or the combustion air inlet to any other appliance	3 ft (91 cm)	1 ft (30 cm)	4 ft (1.2 m) below or to side of opening; 1 ft (30 cm) above opening
K	Clearance to mechanical air supply inlet	6 ft (183 cm)	3 ft (91 cm) above if within 10 ft (3 m) horizontally	
L	Clearance above paved sidewalk or paved driveway located on public property	7 ft (213 cm)**	7 ft (213 cm)	7 ft (213 cm)
M	Clearance under veranda, porch deck, or balcony	1 ft (30 cm)***	1 ft (30 cm)***	1 ft (30 cm)***

*Clearance in accordance with local installation codes and the requirements of the gas supplier.
**A vent shall not terminate directly above a sidewalk of paved driveway that is located between two single family dwellings and serves both dwellings.
***Permitted only if veranda, porch, deck, or balcony is fully open on a minimum of two sides beneath the floor.
The vent for condensing water heaters shall not terminate:

- over public walkways; or
- near soffit vents or crawl space vents or other areas where condensate or vapor could create a nuisance or hazard or cause property damage; or
- where condensate vapor could cause damage or could be detrimental to the operation of regulators, relief valves, or other equipment.

Notes:
1) In accordance with the current CSA B149.1, Natural Gas and Propane Installation Code.
2) In accordance with the current ANSI Z223.1/NFPA 54, National Fuel Gas Code.

Clearances for Sidewall Terminations

⚠ WARNING! Improper installation can result in carbon monoxide poisoning or death. Follow all local and national codes regarding proper termination clearances. In the absence of such codes, the clearances below can be used as guidelines. Local codes supersede these guidelines.

Multiple Sidewall Terminations

An exhaust termination must be at least 1 ft. (305 mm) from another exhaust termination and 2 ft. (610 mm) form an inside corner (Figure 23).

Exhaust terminations should be at least 2 ft. (610 mm) away from an opposite surface/wall. Do not place the termination directly in front of an opening into a building (Figure 24).

Multiple Direct Vent Sidewall Terminations

A direct vent (DV) termination must be at least 1 ft. (305 mm) from another DV termination and 2 ft. (610 mm) from an inside corner (Figure 25).

DV sidewall terminations should be at least 2 ft. (610 mm) away from an opposite surface/wall. Do not place the termination directly in front of an opening into a building (Figure 24).

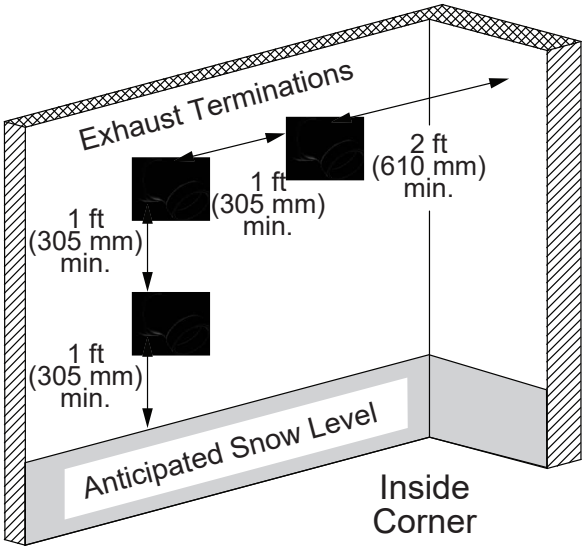

Figure 23 - Multiple Sidewall Terminations

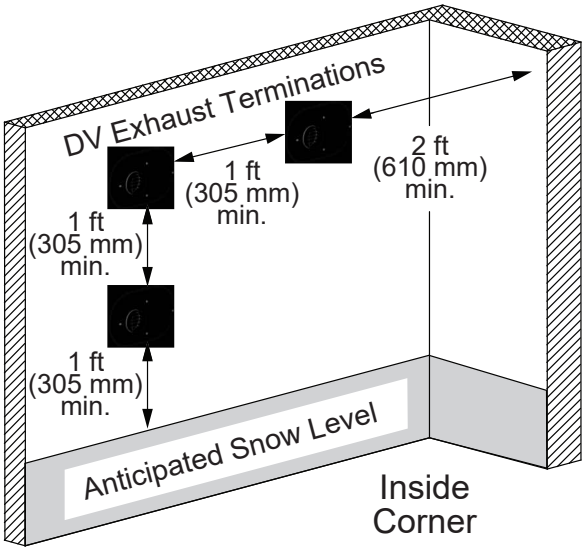

Figure 25 - Multiple DV Sidewall Terminations

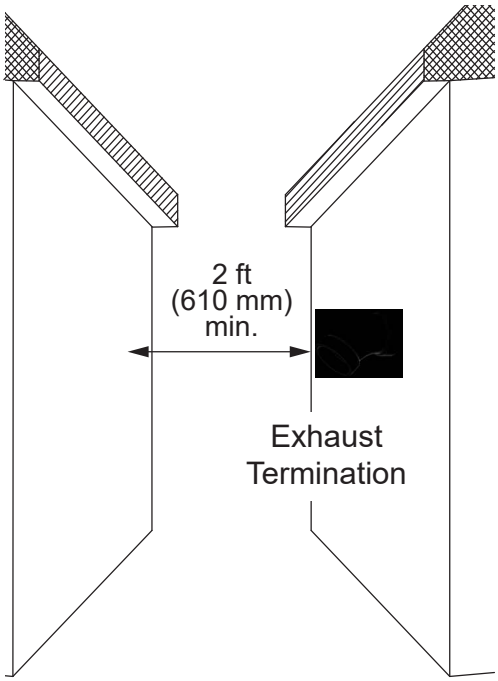

Figure 24 - Sidewall Termination Minimum Distance to Opposite Surface/Wall

Power Direct Vent (PDV) Sidewall Terminations with Separate Penetrations

For PDV terminations that use two separate penetrations for the intake and exhaust, keep the termination clearances as shown in the diagrams below.

Figure 26 - Separate Sidewall Penetration Example A

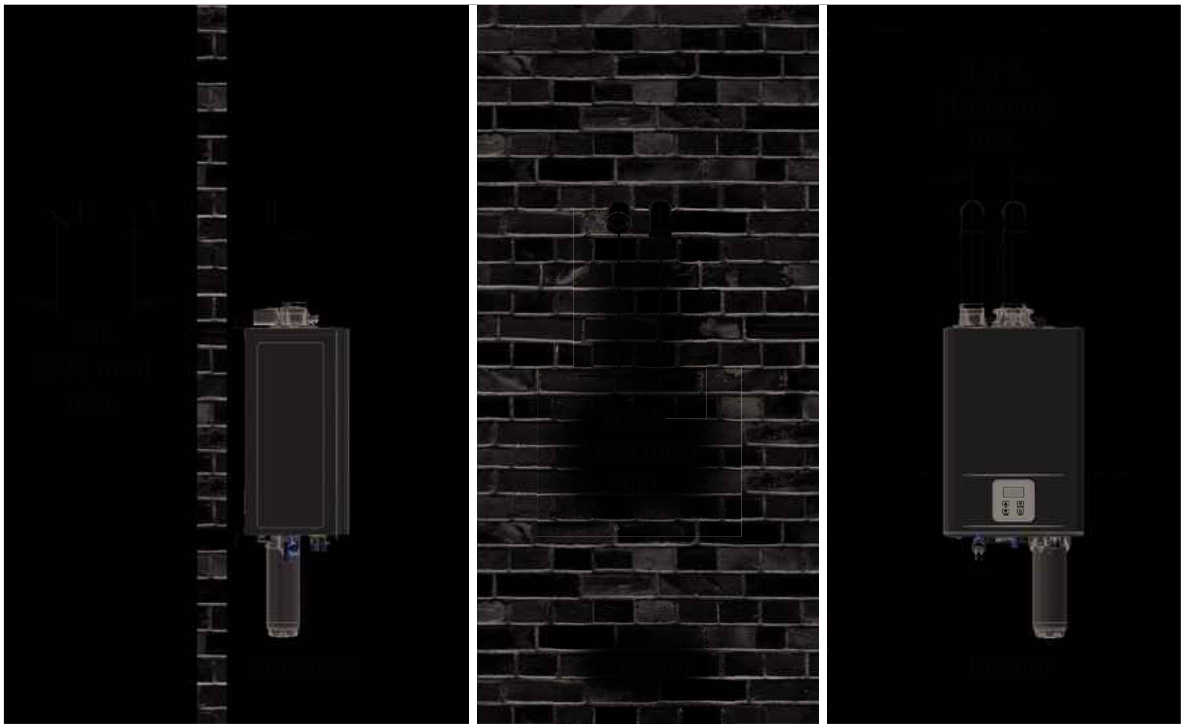

Figure 27 - Separate Sidewall Penetration Example B

Clearances for Rooftop Terminations

⚠ WARNING! Follow all local and national codes regarding proper termination clearances. In the absence of such codes, the clearances below must be met. Local codes supersede these clearances. Failure to observe this warning may result in severe personal injury or death.

NOTICE: Canadian requirements differ from the guidelines in this section. In Canada, follow the requirements of the current edition of B149.1, Natural Gas and Propane Installation Code as well as local and provincial codes. Contact your local code enforcement agency for direction.

- Exhaust terminations must be at least 1 ft. (305 mm) away from any obstructions.
- Minimum spacing between multiple intake terminals is 1 ft. (305 mm).
- Minimum spacing between multiple exhaust terminals is 1 ft. (305 mm).
- The exhaust termination must be a horizontal distance of at least 2 ft. (610 mm) from a wall or surface unless specified differently by local code.
- Failure to observe this warning may result in severe personal injury or death.

Typical Power Direct Vent (PDV) Installation

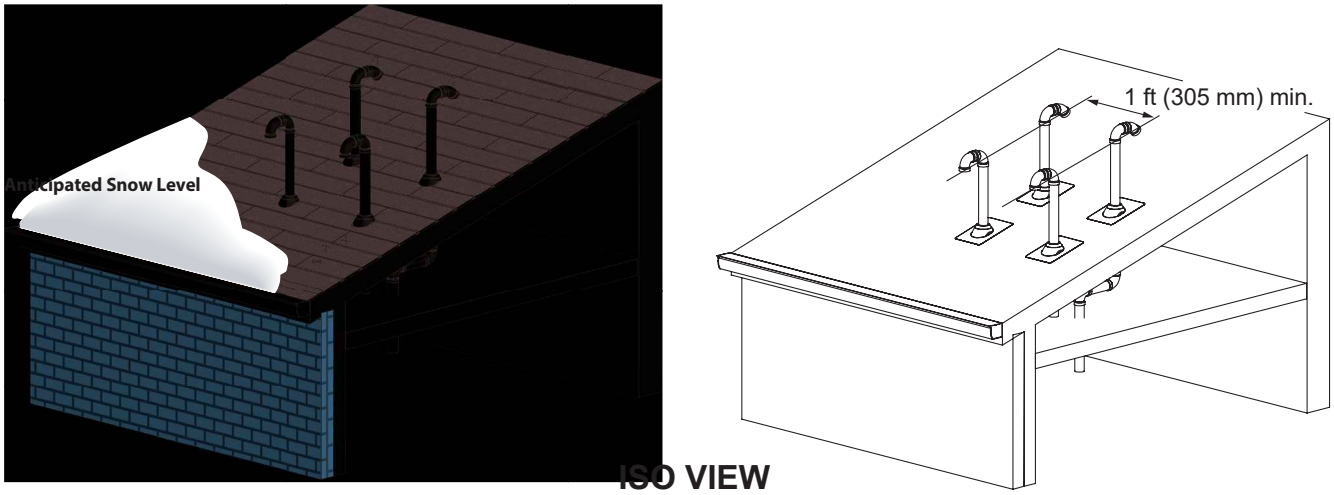

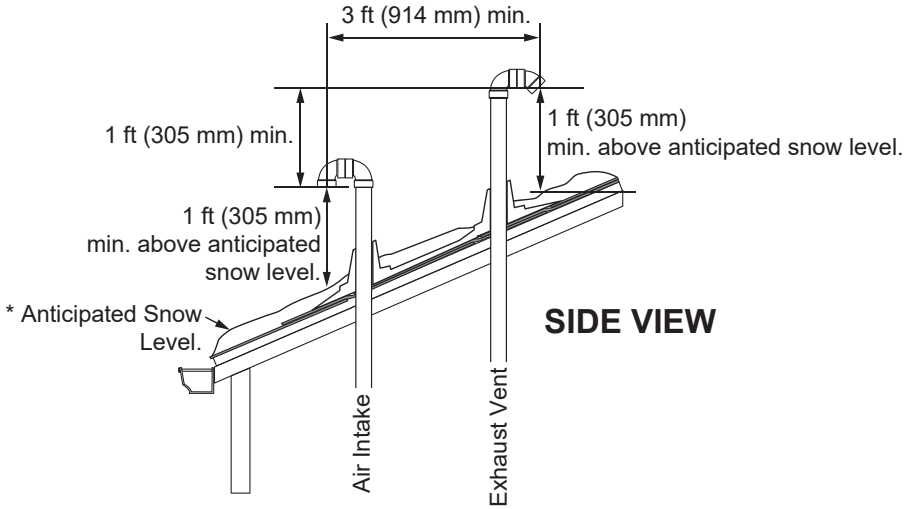

Follow all local and national codes regarding proper termination clearances. In the absence of such codes, the clearances below must be met. Local codes supersede these clearances.

Figure 28 - Pitched Roof with Multiple Vent Terminations

Typical PDV Concentric Installation

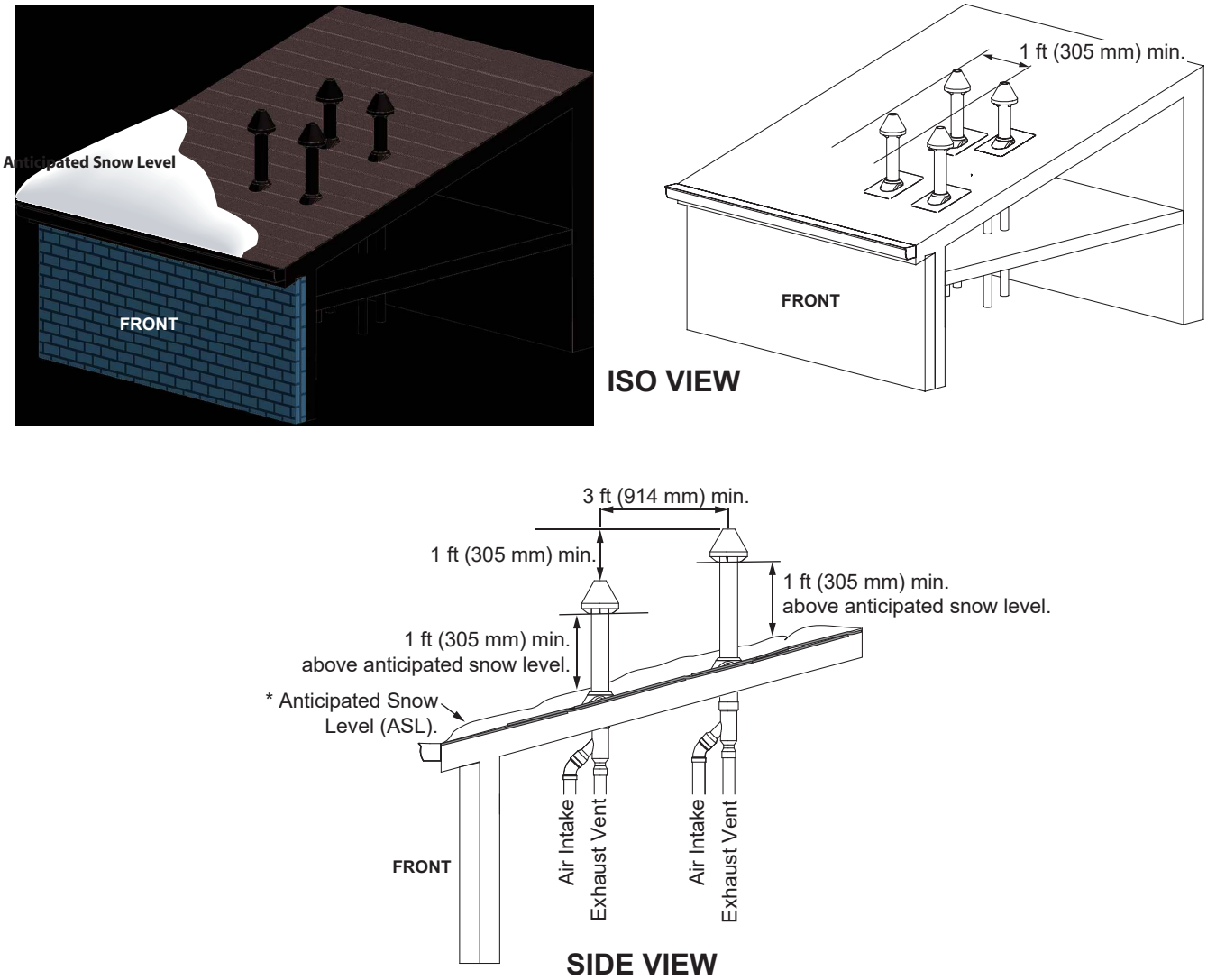

Follow all local and national codes regarding proper termination clearances. In the absence of such codes, the clearances below must be met. Local codes supersede these clearances.

Figure 29 - Pitched Roof with Multiple Vertical Concentric Terminations

Typical Flat Roof Terminations (Both Single and Multiple)

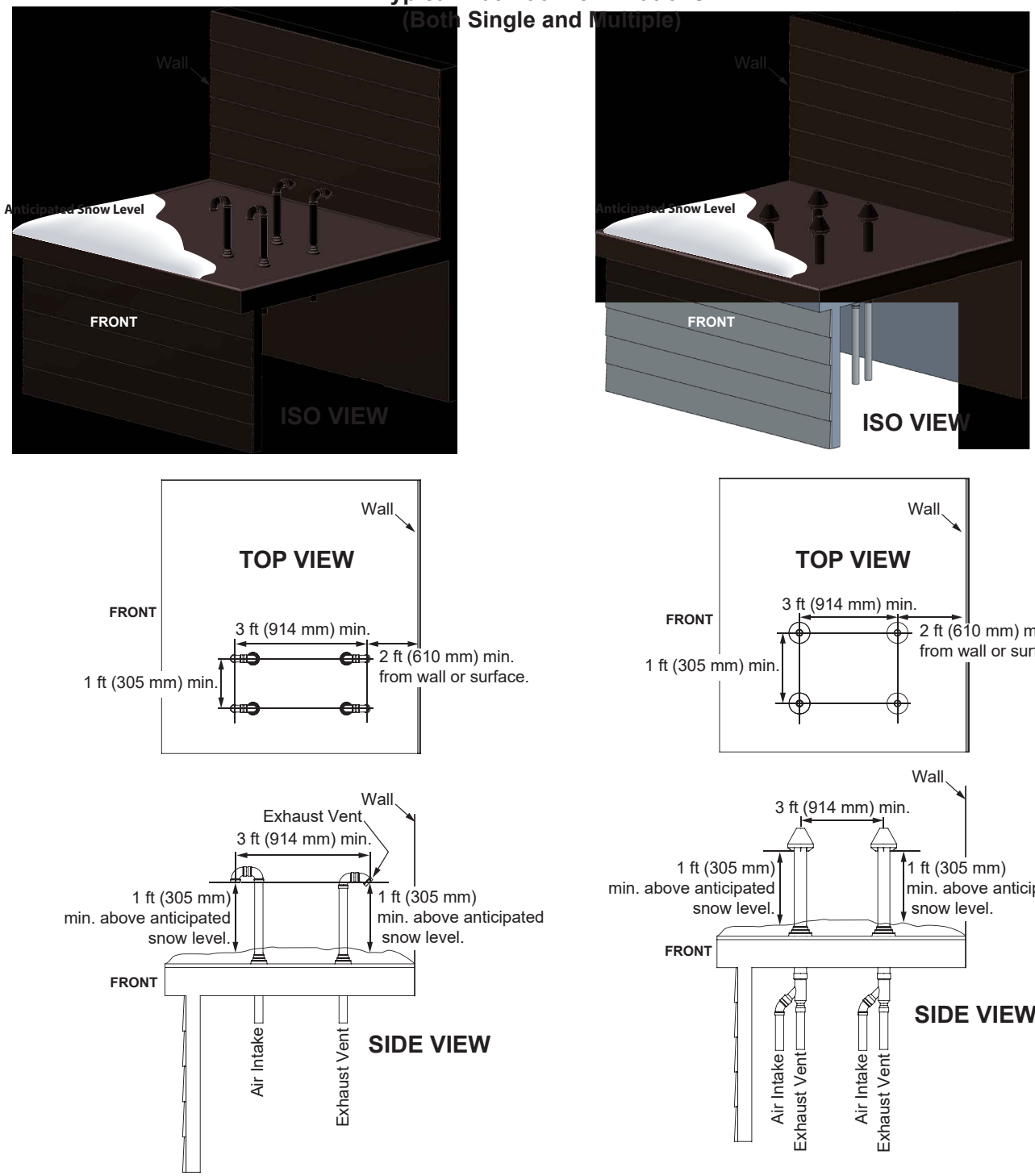

Follow all local and national codes regarding proper termination clearances. In the absence of such codes, the clearances below must be met. Local codes supersede these clearances.

Figure 30 - Flat Roof with Multiple Vertical Terminations

Exhaust Vent for Outdoor Installation

1 Turn **OFF** power and gas supply to the water heater. Remove the four screws from the top plate of the water heater as shown in Figure 31.

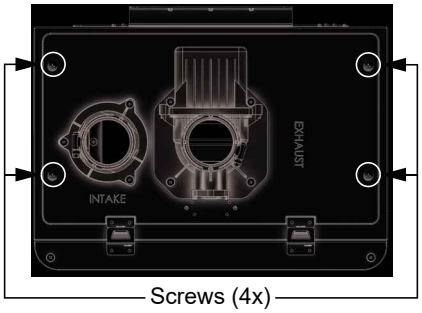

Figure 31 - Remove Screws from Top Plate

2 Orient the outdoor vent cap as shown in Figure 32. Secure the outdoor vent cap with the four screws removed in the previous step.

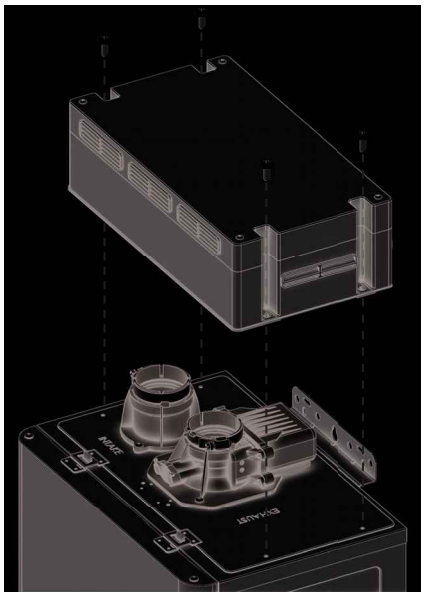

Figure 32 - Orient and Install Vent Cap

3 Once the outdoor vent cap is secured to the water heater, install the UIM overlay to the digital display to protect it from hazardous weather conditions and accidental control adjustments (Figure 33).

Figure 33 - Install UIM Overlay

4 Remove the front cover to the water heater cabinet.

5 Locate the air inlet plate as shown in Figure 34. Remove and keep the 3 screws securing it to the base of the water heater. The plate is color coded, and it should be rotated so that the yellow side of the plate is rotated upward. Secure with the 3 screws removed earlier.

INDOOR CONFIGURATION

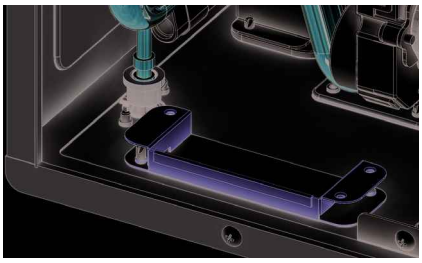

OUTDOOR CONFIGURATION

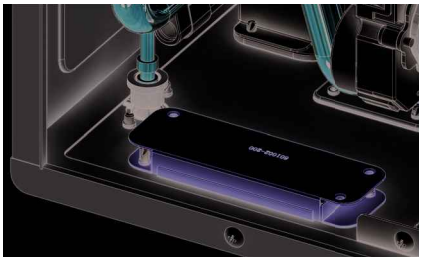

Figure 34 - Air Inlet Plate Orientation

6 Install front cover to water heater.

7 Connect power to the water heater. See “Electrical Connections” on page 42.

NOTICE: This water heater comes equipped with a SJWT rated cord which is weather resistant and rated for outdoor use. See “Electrical Connections” on page 42.

Outdoor Available Accessories

It is recommended that a Cartridge Freeze Protection Kit be installed if the water heater is installed outside or in unconditioned areas subject to freezing temperatures.

A pipe cover is available and affixes to the bottom of the water heater. It protects plumbing connections to the water heater while improving the appearance of the installation.

For more information see “Available Accessories” on page 15.

Gas Supply and Gas Pipe Sizing

Gas Piping

⚠ WARNING! This water heater is designed for Natural Gas operation only. Refer to the water heater's rating plate. Failure to follow these instructions can result in serious injury or death from explosion, fire or carbon monoxide poisoning.

Ensure that any and all gas regulators used are operating properly and providing gas pressures within the specified range as shown in Table 13. Excess gas inlet pressure may cause serious accidents.

Gas piping must be installed according to local and state/provincial codes, or in the absence of these codes, the current editions of ANSI Z223.1/NFPA 54, National Fuel Gas Code in the USA or B149.1, Natural Gas and Propane Installation Code in Canada.

- **DO NOT** attach the gas line to the water heater until after the supply line pressure testing has been completed to avoid any damage to the water heater.
- The minimum and maximum inlet gas pressures are shown in Table 13:

Table 13: Minimum & Maximum Inlet Gas Pressures

Gas Type	Inlet Gas Pressure
Natural Gas	Min. 4.0" W.C. (1.0 kPa) Max. 10.5" W.C. (2.62 kPa)

Size the gas pipe appropriately to supply the necessary volume of gas and allowable pressure drop required for the water heater using the manufacturer's gas piping instructions, local and state/provincial codes, or in the absence of these codes, the current editions of ANSI Z223.1/NFPA 54, National Fuel Gas Code in the USA or B149.1, Natural Gas and Propane Installation Code in Canada. Otherwise, flow capabilities and output temperatures will be limited. See Table 14.

NOTICE: If you are replacing a smaller input water heater, you may need to increase the gas line size.

- Inlet gas pressures that fall outside the range of values listed above may adversely affect the performance of the water heater. These pressures are measured when the water heater and any other gas appliance served by the same gas line are in full operation.
- Inlet gas pressure must not exceed the maximum values in Table 13; gas pressure above the specified range will cause dangerous operating conditions and damage the unit.
- If the gas supply pressure to the heater is greater than the specified maximum, a field-supplied regulator is required. The regulator must lower the gas pressure within the approved range.
- Install the gas regulator according to the manufacturer's instructions. Some manufacturers may require a certain amount of straight pipe on the outlet prior to any additional fittings.
- The regulator must be sized for the water heater's minimum to maximum input and provide the specified pressures that are listed on the rating plate.
- In the absence of minimum install distance stated by the regulator manufacturer, it is recommended that there be at least 3 ft. (0.9 m) of piping between the regulator outlet and the water heater's inlet gas connection.

Gas Connections

1 Use a 3/4 inch union to connect gas piping to the water heater's 3/4 inch male NPT connection.

NOTICE: Refer to Table 14 if 1/2 inch piping is desired. If the maximum input of the unit is greater than the maximum delivery capacity for the installation's length of 1/2 inch pipe, then 3/4 inch piping is required.

2 Install a full port manual gas shut-off valve between the water heater and the gas supply line.

3 When the gas connections are completed, it is necessary to perform a gas leak test either by applying soapy water to all gas fittings and observing for bubbles or by using a gas leak detection device.

- The water heater and its individual shut-off valve must be disconnected from the gas supply piping system during any pressure testing of that system at test pressures in excess of 1/2 psi (3.5 kPa).
- The water heater must be isolated from the gas supply piping system by closing its individual manual shut-off valve during any pressure testing of the gas supply piping system at test pressures equal to or less than 1/2 psi (3.5 kPa).

4 Always purge the gas line of any debris and/or water before connecting to the gas inlet.

Natural Gas Supply Piping

Maximum delivery capacity of cubic feet of gas per hour of IPS pipe carrying Natural Gas with 0.60 specific gravity based on 0.5" W.C. pressure drop.

Based on Energy Content of 1,000 BTU/Cubic feet, the water heater requires:

- 160 ft^3/hr for the TM-160 model
- 180 ft^3/hr for the TM-180 model
- 199 ft^3/hr for the TM-199 model

Table 14 below is from ANSI Z223.1/ NFPA 54.

Gas Sizing Example

Based on Energy Content of 1,000 BTU/Cubic feet (Figure 35):

1 Divide each appliance's BTU/h requirement by 1,000 BTU/ft^3 to get the appliance's ft^3/h requirement. Take into account the distance the appliance is from the gas meter. Use Table 14 and Figure 35 below to properly size the line.

2 For sections of the gas line supplying gas to more than one appliance (e.g., Point A to Point B), add up the cubic feet per hour requirements of the appliances that are being supplied by that section, and size to the farthest appliance.

FOR EXAMPLE: The section from A to B supplies gas to the furnace, range and dryer. Adding up the BTU/h requirement and dividing by 1,000 yields a cubic ft per hour requirement of 220 cubic ft of gas per hour. The farthest appliance is the range, which is 50 ft away from the meter. Looking at the chart below, and under the column of 50 ft, Section A to B needs to be 1" in order to supply 220 cubic feet.

Table 14: Natural Gas Supply Piping — Unit: Cubic feet per hour

Pipe Size	Length: ft (m)												
Diameter: in.	10' (3.0)	20' (6.1)	30' (9.1)	40' (12.2)	50' (15.2)	60' (18.3)	70' (21.3)	80' (24.4)	90' (27.4)	100' (30.5)	125' (38.1)	150' (45.7)	200' (61.0)
1/2"	172	118	95	81	72	65	60	56	52	50	44	40	34
3/4"	360	247	199	170	151	137	126	117	110	104	92	83	71
1"	678	466	374	320	284	257	237	220	207	195	173	157	134
1-1/4"	1,309	957	768	657	583	528	486	452	424	400	355	322	275
1-1/2"	2,090	1,430	1,150	985	873	791	728	677	635	600	532	482	412
2"	4,020	2,760	2,220	1,900	1,680	1,520	1,400	1,300	1,220	1,160	1,020	928	794

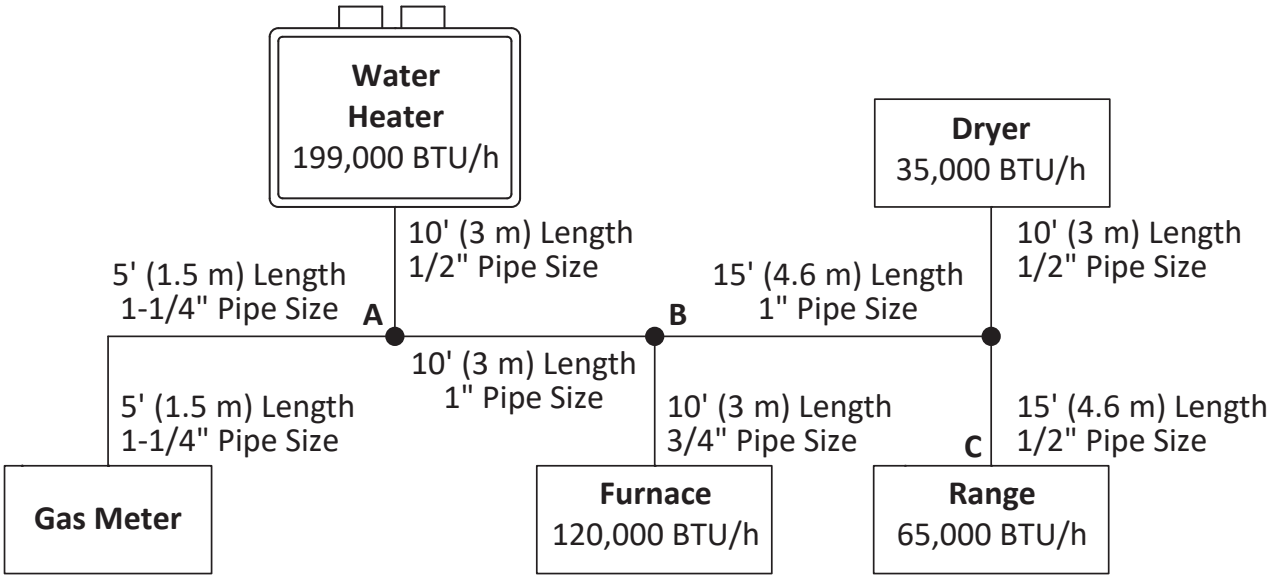

Figure 35 - Pipe Sizing Diagram

Water Connections

⚠ WARNING! DO NOT use this appliance if any part has been under water. Immediately contact a qualified installer or service agency to replace a flooded water heater. DO NOT attempt to repair the unit! It must be replaced!

IMPORTANT: DO NOT reverse the hot outlet and the cold inlet connections to the water heater. If you reverse the connections, the water heater will not activate properly.

Determine the type of water pipes in your home. Use fittings appropriate for the type of pipe in your home (copper, CPVC or PEX). Do not use iron or PVC pipe – they are not suitable for potable water. All pipes, pipe fittings, valves and other components, including soldering materials, must be suitable for potable water system. Also, an automatic air vent or air separator must be installed when the water heater operates in a closed loop system such as a recirculation system. Trapped air bubbles in the water system can cause a pump to cavitate or damage the water heater's heat exchanger. This equipment must be installed according to its manufacturer's instructions.

A manual shut-off valve must be installed on the cold water inlet to the water heater between the main water supply line and the water heater. In addition, a manual shut-off valve is also recommended on the hot water outlet.

A thermal expansion tank or code approved device to handle thermal expansion must be installed and charged to match the supply pressure as per the thermal expansion tank manufacturer's instruction.

Making Water Connections

IMPORTANT: Before installing the water heater, flush the water line to remove all debris, and after installation is complete, purge the air from the line. Failure to do so may cause damage to the heater.

NOTICE: There is a wire mesh filter within the cold inlet to trap debris from entering your water heater. This will need to be cleaned periodically to maintain optimum flow.

The water inlet and outlet threaded connections are brass. When connecting the unit to piping made of a different material, use of a dielectric fitting or a dielectric union conforming to ASSE 1079 is recommended to prevent corrosion and potential subsequent water leaks at or near the connection. Dielectric fittings may be required by local plumbing codes.

1. Connect the hot water supply using 3/4 inch NPT to the fitting marked "HOT." Follow the same connection guidelines as for the cold water supply marked "COLD."
2. Double check to make sure the hot and cold water pipes are connected to the correct hot and cold water fitting on the water heater.
3. Install insulation (or heat tape) on the water pipes especially if the indoor installation area is subject to freezing temperatures. Insulating the hot water and return pipes will reduce heat loss.
4. If water hammer is evident, install water hammer arrestors on the inlet side of the water heater.
5. If needed, install (or adjust) the home's Pressure Reducing Valve.
6. A drain pan, or other means of protection against water damage, is recommended to be installed under the water heater in case of leaks.

IF YOU HAVE COPPER PIPES

If your home has copper water pipes, you can solder the water pipe connections or use compression fittings which do not require soldering. Compression fittings are easier to install than soldering pipe. Check with local plumbing officials to determine what types of pipe materials are suitable for your location. **DO NOT** use lead-based solder.

NOTICE: DO NOT solder pipes while they are attached to the water heater. The water heater contains non-metallic parts which could be damaged. The proper way to connect the water heater to copper water pipes is as follows:

1. Solder a short length of pipe (about a foot or so) to a threaded adapter using only 95/5 tin antimony or equivalent solder.
2. Attach the threaded adapters to the water heater's connections (using thread sealant tape or pipe joint compound).
3. Connect the home's water pipes by soldering, keeping the connections at the water heater cool with wet rags.

X3® Technology

⚠ WARNING! DO NOT operate water heater until either the X3® Cartridge or Bypass cartridge has been installed into the manifold located on the underside of the water heater cabinet. Failure to do so may result in leaks and potential property damage.

This water heater may be equipped with X3® Scale Prevention Technology to inhibit scale formation within the heat exchanger tubing of this unit. Part of the X3® Technology's anti-scale protection comes from the special X3® Cartridge media. The X3® Cartridge must be installed into the manifold located on the underside of the heater cabinet prior to operation of the unit (shown as follows). X3® Scale Prevention Technology reduces the formation of scale in the heat exchanger, extending the operating life of the unit in typical potable water installations. Specific water conditions may impact the efficiency of X3®, such as excessive iron (max limit 0.3 mg/l or 0.3 ppm) or manganese (max limit 0.05 mg/l or 0.05 ppm) levels.

Figure 36 - X3® & Bypass Cartridges

X3® Cartridge Installation

1. Remove the plug assembly installed into the manifold located on the underside of the water heater cabinet. Properly dispose of plug assembly materials.

⚠ CAUTION! Water may be present in the manifold. Place a bucket under the water heater cabinet to collect any residual water.

2. Locate the three (3) screws provided in the hardware bag on the top of the water heater carton. Set the one Ⓐ screw (M4-12mm) and two Ⓑ screws (M4-25mm) aside in a safe place.

3. Locate the X3® Cartridge provided with the water heater.

NOTICE: Inspect O-rings for damage or debris. Handle with care and verify lubricant has been properly applied to O-rings.

4. Insert the X3® Cartridge into manifold and secure with the one Ⓐ screw and two Ⓑ screws previously set aside in **Step 2**.

NOTICE: The X3® cartridge is keyed to only install in one direction. Align the ▲ on the X3® cartridge with the ▼ on the manifold (the bypass cartridge is not keyed and will install in either direction). When inserting the X3® cartridge, push up until the screw holes align. Some resistance is normal. See Figure 37 for reference.

Insert and snug all three screws by hand. Use a screwdriver to tighten the two Ⓑ screws first and lastly tighten the one Ⓐ screw. **DO NOT** use a drill or impact driver to tighten the screws.

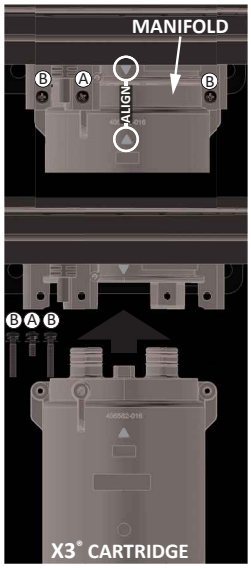

Figure 37 - X3® Cartridge Installation

X3® Cartridge Removal

1. Disconnect power to the water heater by unplugging it or by turning off the circuit at the breaker box.

2. Close the cold inlet water valve.

3. Open all hot water taps in the house. When the residual water flow has ceased, close all hot water taps.

NOTICE: Place a bucket under the water heater cabinet to collect any residual water.

4. Remove the two Ⓑ screws and the one Ⓐ screw securing the X3® Cartridge to the manifold located on the underside of the water heater cabinet. Set the screws aside in a safe place for re-installation. Note the order of the screws when removing them. Reference Figure 37.

5. Pull down to remove the X3® Cartridge from the water heater.

NOTICE: The X3® Cartridge will be full of water. Use caution not to tilt the cartridge until the water has been drained.

Bypass Cartridge

If the water heater is an M model, confirm the Bypass cartridge has been properly installed before operating the water heater.

NOTICE: Bypass cartridge installs the same way as the X3® cartridge, however it is not keyed.

Pressure Relief Valve

⚠ WARNING! Hot water could be released. Before operating the pressure relief valve manually, check that it will discharge in a safe place. If water does not flow freely from the end of the discharge pipe, turn the gas supply and power OFF and call a qualified person to determine the cause.

Refer to the pressure relief valve manufacturer's instructions for inspection and maintenance requirements.

The water heater has a high-temperature shut-off switch built in as a standard safety feature (called a Hi-Limit switch), therefore a "pressure only" relief valve is required.

An approved pressure relief valve is supplied with X3® models. An approved pressure relief valve shall be field supplied for M models.

The discharge piping for the pressure relief valve must be directed so that hot water cannot splash outward and cause damage or personal injury.

Attach the discharge tube to the pressure relief valve and run the end of the tube to within 6 inches (152 mm) from the floor for USA installations and 12 inches (305 mm) for Canadian installations. This discharge tube must allow free and complete drainage without any restrictions.

If the pressure relief valve discharges periodically, this may be due to thermal expansion in a closed water supply system. Contact the water supplier or a local plumbing professional on how to correct this situation.

⚠ WARNING! DO NOT plug the pressure relief valve.

The pressure relief valve must be manually operated periodically to check for correct operation. Before operating the valve manually, check that it will discharge in a place for secure disposal.

NOTICE: No valve must be placed between the pressure relief valve and the water heater.

If another pressure relief valve is used or needs to be replaced, it must meet the following:

1. The pressure relief valve must conform to ANSI Z21.22 or CSA 4.4 and installation must follow local codes.

2. The discharge capacity must be at least:

- 160,000 BTU/h for the TM-160 model
- 180,000 BTU/h for the TM-180 model
- 199,000 BTU/h for the TM-199 model

3. The pressure relief valve needs to be rated for a maximum of 150 psi.

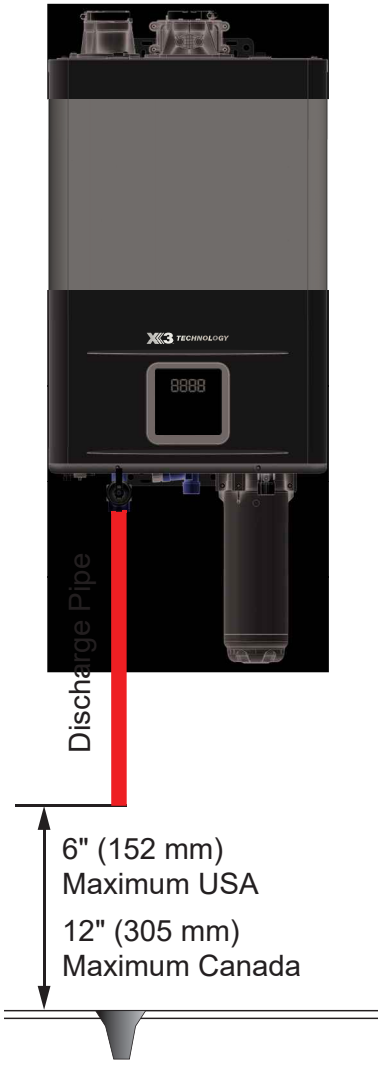

Figure 38 - Discharge Pipe Clearance

Condensate Drain

Follow all code requirements of the local authority on condensate neutralizers and whether or not they are required for installation.

- Discharge condensate (acidic water) in accordance with all local codes and common safety practices.
- Install a minimum of 1/2 inch corrosion resistant pipe, such as PVC, for the condensate drain line. **DO NOT** use metal pipe.
- The condensate drain does not require a trap.
- Maintain a downward slope on the drain line(s), including installations in which the drain is not directly below the water heater.
- If a neutralizer is installed, a field-supplied overflow bypass fitting (tee/wye) is recommended.
- **DO NOT** connect the condensate drain line directly to a condensate pump.
- If the drain line is required to have bends, ensure that there are no kinks that will restrict the flow of condensation.
- The condensate drain is at atmospheric pressure (non-pressurized) and therefore must be allowed to drain freely with gravity only. Ensure that the condensate drain tube is not plugged or blocked, and ensure that it slopes downward to allow condensate to flow freely. All portions of the condensate drain (neutralizer and drain tube) must be at a lower elevation than the water heater to prevent condensate water from building up inside the heat exchanger.
- Condensate cannot be effectively neutralized if the neutralizer elements have been completely consumed. If this happens, condensate will remain acidic and can possibly cause damage to items such as pipes, concrete, etc., if drained improperly.
- The actual life of the neutralizer may vary, depending on the application and usage. Replace the cartridge when the condensate pH goes below 6.0.
- All preventative measures and safety practices must be adhered to when draining condensate. The manufacturer will not be responsible for any damage caused by condensate.
- A drain pan, or other means of protection against water damage, is recommended to be installed under the water heater in case of leaks.

Recirculation

When installing a recirculation pump, care must be taken to properly size the pump for the application. Sizing must be performed by the installing contractor or engineer. Below are the requirements that need to be followed when sizing:

- Size the recirculation pump to flow no less than 2 gpm (7.6 L/min) and no more than 4 gpm (15.1 L/min) per heater activation. The manufacturer's suggested flow rate is 3 gpm (11.4 L/min). Refer to the water heater's pressure drop chart on its specification sheet for losses at other flow rates. See Table 15 below for head loss through the water heater.

Table 15: Head Loss

Config.	Flow Rate	Head Loss
X3® Models	3 gpm (11.4 L/min)	25 ft. (7.6 m)
M Models	3 gpm (11.4 L/min)	30 ft. (9.1 m)

- The pump should be controlled by a field supplied aquastat with immersion probe and an adjustable differential. The minimum suggested differential is 15°F (8.3°C).

NOTICE: Running the pump continuously will reduce the warranty of the water heater.

- An air elimination device is suggested to remove air from the piping system. Air may cause the recirculation pump to cavitate and may reduce the water flow rate. These items should be installed per the manufacturer's instructions.

The installer will need to consider the size of water tubing, material type, and fittings when determining the pressure drop of the system to size the recirculation pump.

NOTICE: These characteristics vary for each tubing material of the same nominal size. Refer to the water tubing manufacturer for pressure drop information that is needed to size the recirculation pump. Check with local codes and ordinances for additional installation requirements.

Point-of-use thermostatic mixing valves may be used with tankless water heaters. Consult with the point-of-use thermostatic mixing valve manufacturer for the appropriate valve for the application. Refer to the point-of-use thermostatic mixing valve manufacturer for proper installation when recirculation is in use.

⚠ WARNING! To reduce the risk of unusually hot water reaching the fixtures in the house, install Thermostatic Mixing Valves at each point-of-use.

NOTICE: Figure 39 on page 41 provides the manufacturer's suggested piping layout for recirculation. The installer must properly install the system per manufacturer's instructions and local codes. Refer to the water heater manufacturer's website for additional layouts.

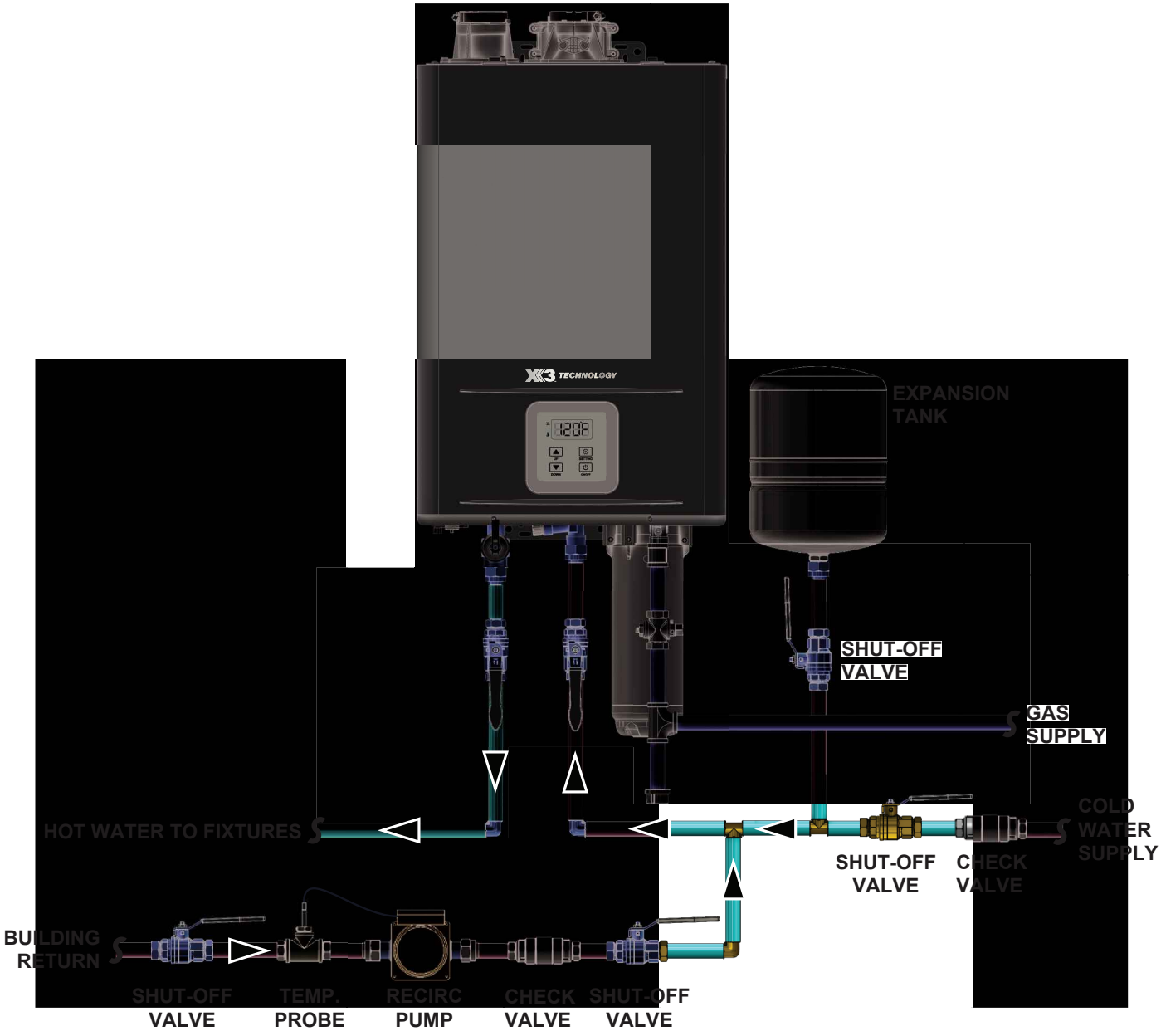

Figure 39 - Recommended Recirculation Diagram

Electrical Connections

⚠ WARNING! Working on an energized circuit can result in severe injury or death from electrical shock.

⚠ WARNING! The water heater must be electrically grounded. DO NOT attach the ground wire to either the gas or the water piping.

Power Supply

- The water heater requires a 120 VAC, 60 Hz electrical power supply that is properly grounded.
- A proper disconnect (i.e., ON/OFF switch, power plug, etc.) controlling the main power to the water heater must be provided for service reasons. This disconnect must comply with local codes.
- This water heater comes equipped with a SJWT rated cord which is weather resistant and rated for outdoor use.
- The water heater can be hardwired or plugged into an outlet with the correct voltage (listed above) using the supplied power cable already attached.
- The use of a surge protector is recommended in order to protect the unit from power surges.

Plug-in Connection (Indoor & Outdoor Installs)

1. The water heater should be plugged into a 120 VAC, 60 Hz ground electrical outlet.

Hardwired Connection (Indoor & Outdoor Installs)

NOTICE: Follow the steps below if the power supply must be hardwired to the water heater. Otherwise, you may skip this section.

1. Remove and keep the two screws securing the front cover. Remove the cover.
2. Locate the system power cord using Figure 40. Cut the wires at the location shown in Figure 40.

Figure 40 - System power cord cut location.

3. Remove the screws securing the power cord to the bottom of the water heater.
4. Remove the power cord from the bottom of the water heater and install a strain relief connector in the opening.
5. Make the electrical connection to the water heater. Follow the electrical code requirements of the local authority having jurisdiction. In the absence of local codes, follow the current edition of the National Electrical Code ANSI/NFPA 70 in the U.S. or the current edition of CSA C22.1 Canadian Electrical Code Part 1 in Canada.
6. Verify all electrical connections are secure.
7. Replace the front cover and secure with the two screws previously removed. Turn on power to the water heater.
8. Follow the instructions in the Getting Started section of this manual.

Accessory Connections

This system supports up to three accessories connected in series.

NOTICE: If multiple water heaters are used in a Cascade System, all accessories must be connected in series to the parent unit.

Follow the accessory kit instructions to access the control board.

Each accessory has both a five-pin female connector and a section of cable with a five-pin male connector on the end (see Figure 41). The male connector connects to the control board or to the next accessory in the series. The five-pin female connector allows another accessory to connect and create a series. Reference the figure below when creating a series of accessories. If the length of the accessory cord is not long enough, communication cables can be purchased to extend the length. These cables are available in 10 ft. (3 m) and 32 ft. (10 m) lengths. Connect the single five-pin connector on the communication cable to the five-pin female connector on the accessory. The maximum wire length from the water heater (the Parent unit in a Cascade System) to the furthest accessory is 100 ft. (30 m).

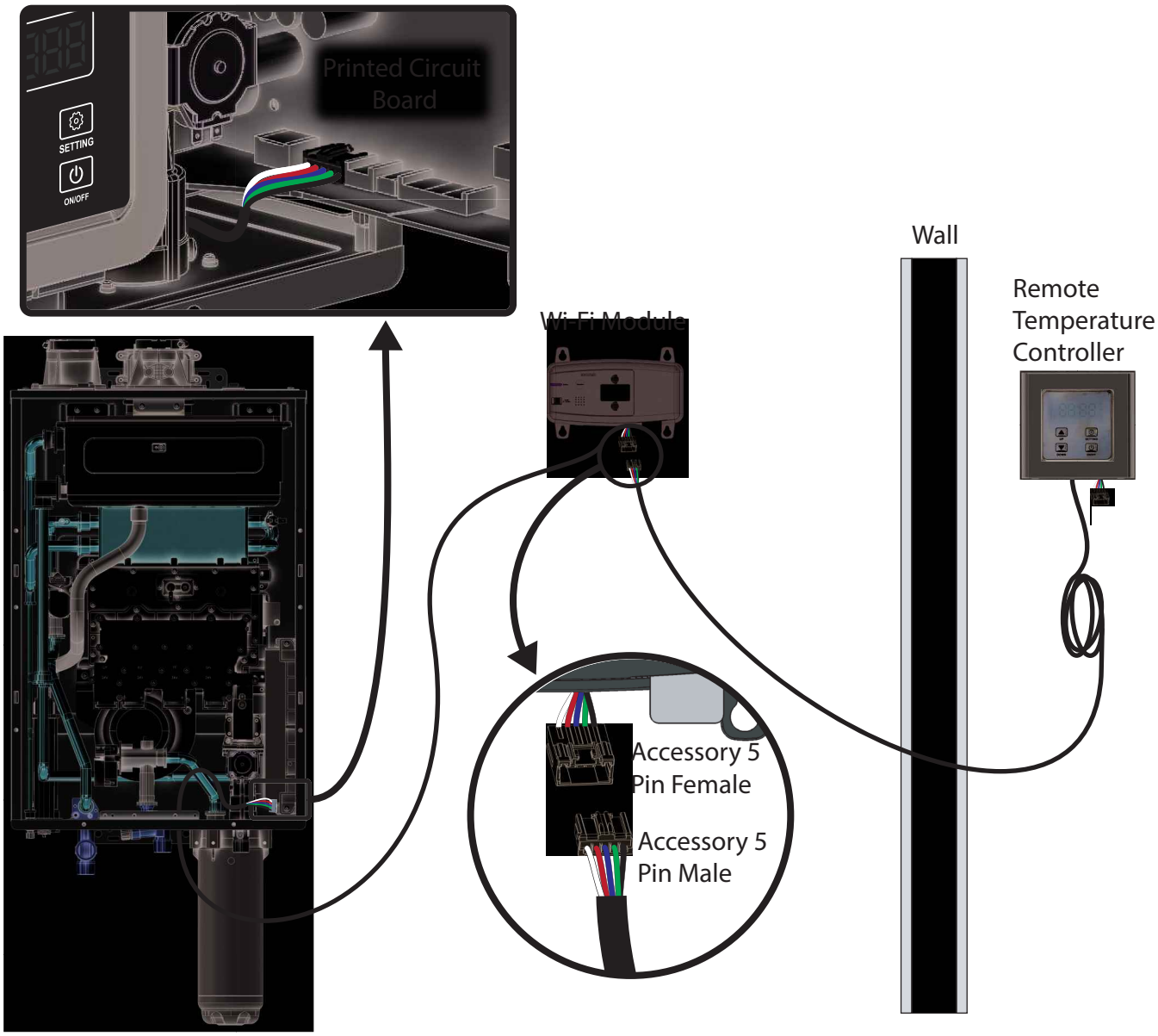

Figure 41 - Accessories Installed in Series

Cascade System

The Cascade System allows up to 12 heaters of the same input to be linked in a Parent/Child configuration. Do not link heaters of different input rates together.

The Cascade System will activate heaters based on the system flow rate demand. When system demand increases or decreases, the cascade system will activate/deactivate heaters as needed to balance flow through the heaters.

The Parent heater determines when to activate/deactivate heaters. The order of heater activation is set by the Parent heater and will sequence the heaters in order from the least combustion hours to the most. This allows for even operation of all the water heaters in the cascade system. The heaters will deactivate in the reverse order that they are activated, meaning if Child Heater 11 was the last to turn on, it will be the first to turn off when system demand decreases. The Parent heater will reorder the sequence on a weekly basis.

The new sequence of activation will start with the heater that has the least combustion hours to the most. Each heater will activate based on predetermined flow rate factors. These factors vary based on heater model.

If any child heater encounters an error code, the cascade system will bypass that heater and continue to operate. If the Parent heater loses power, then the cascade system deactivates. The user will need to change the settings of one of the other heaters to be the Parent or resolve the issue of the Parent heater.

⚠ WARNING! Working on an energized circuit can result in severe injury or death from electrical shock.

1. The Cascade system should be configured with the Parent water heater as either the first or last in the series of water heaters connected to the cold water supply. The Child units will follow sequentially. See Figure 44.

2. Before proceeding, disconnect electrical power to all water heaters in the Cascade configuration.

3. Remove the front covers and keep the two screws from both the Parent and Child water heaters for re-installation.

4. Remove the two screws (top and bottom) securing the control panel to the Parent water heater. The control panel is located on the bottom right side of the water heater as shown in Figure 42.

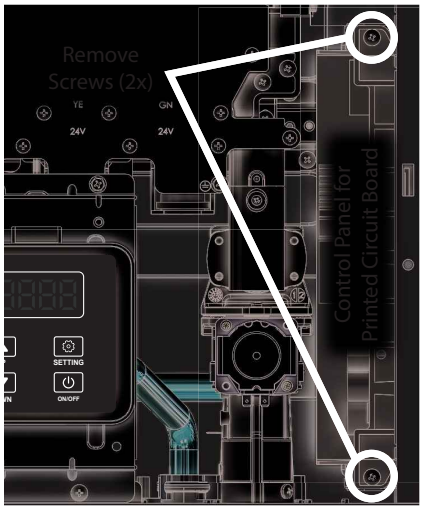

Figure 42 - Control Panel Location

5. Gently slide control panel out from the Parent water heater to gain access to the Printed Circuit Board (PCB). Proceed with caution and **DO NOT** disconnect wires from PCB.

6. Use Figure 43 to locate the rubber access grommet on the bottom of the water heater. Route the single harness end of the Cascade Linking Cable through the bottom and around to the circuit board.

NOTICE: The cable should be routed under the circuit board assembly to prevent strain to the wiring harness.

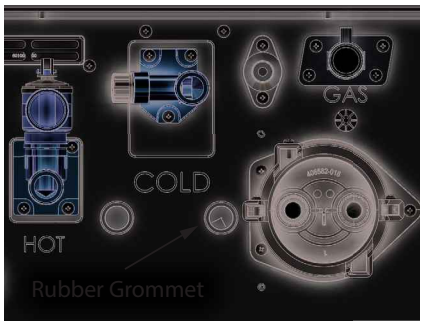

Figure 43 - Bottom of water heater - Grommet

7. Use Figure 44 as a reference to locate the connection point for the Parent Cascade Unit. Use the single harness end of the Cascade Linking Cable to make the initial connection.

8. Follow steps 4-6 to route the double harness end of the Cascade Linking Cable to the printed circuit board on the first Child water heater.

9. If more than one Child water heater is used then route the single harness end of the second Cascade Linking Cable through the rubber grommet on the bottom of the first Child water heater and connect it to the open harness on the first Cascade Linking Cable as shown in Figure 44.

10 Once all connections are made, the water heaters must be assigned their position in the system. Turn on the power supply to all of the water heaters, making sure there is no water flow.

11 On the Parent water heater simultaneously press and hold the "**SETTING**" and "**UP**" buttons until C00 appears. See Table 23 on page 52.

12 Press the UP arrow button to reach the C13 option, then press the "**SETTING**" button to enter that option.

NOTICE: C13 defines the number of Child water heaters that will be connected to the parent unit.

Enter the number of Child water heaters attached to the parent water heater and press the "**SETTING**" button to load the number to memory. For example, if the system consists of four total water heaters, then enter 3 for three child heaters into C13. Press the "**SETTING**" button again to return to normal operation.

13 After the Parent water heater is configured, the Child water heaters must be configured. Perform the following steps on each Child water heater.

14 On each Child unit's UIM, press and hold both the "**SETTING**" and "**UP**" buttons until C00 appears.

15 Press the UP arrow button to reach the C14 option, then press the "**SETTING**" button to enter that option.

NOTICE: C14 defines the number assigned to each Child water heater connected to the parent water heater.

16 Enter number 2 for the first Child water heater and press the "**SETTING**" button to load the number to memory. Repeat this step assigning a sequential number at each additional Child water heater.

17 Press and hold the "**SETTING**" button again to return to normal operation.

NOTICE: A maximum 11 Child water heaters can be connected to a Cascade System of 12 total water heaters.

18 Verify all electrical connections and conduit connections are secure.

19 Follow the instructions in the Getting Started section of this manual.

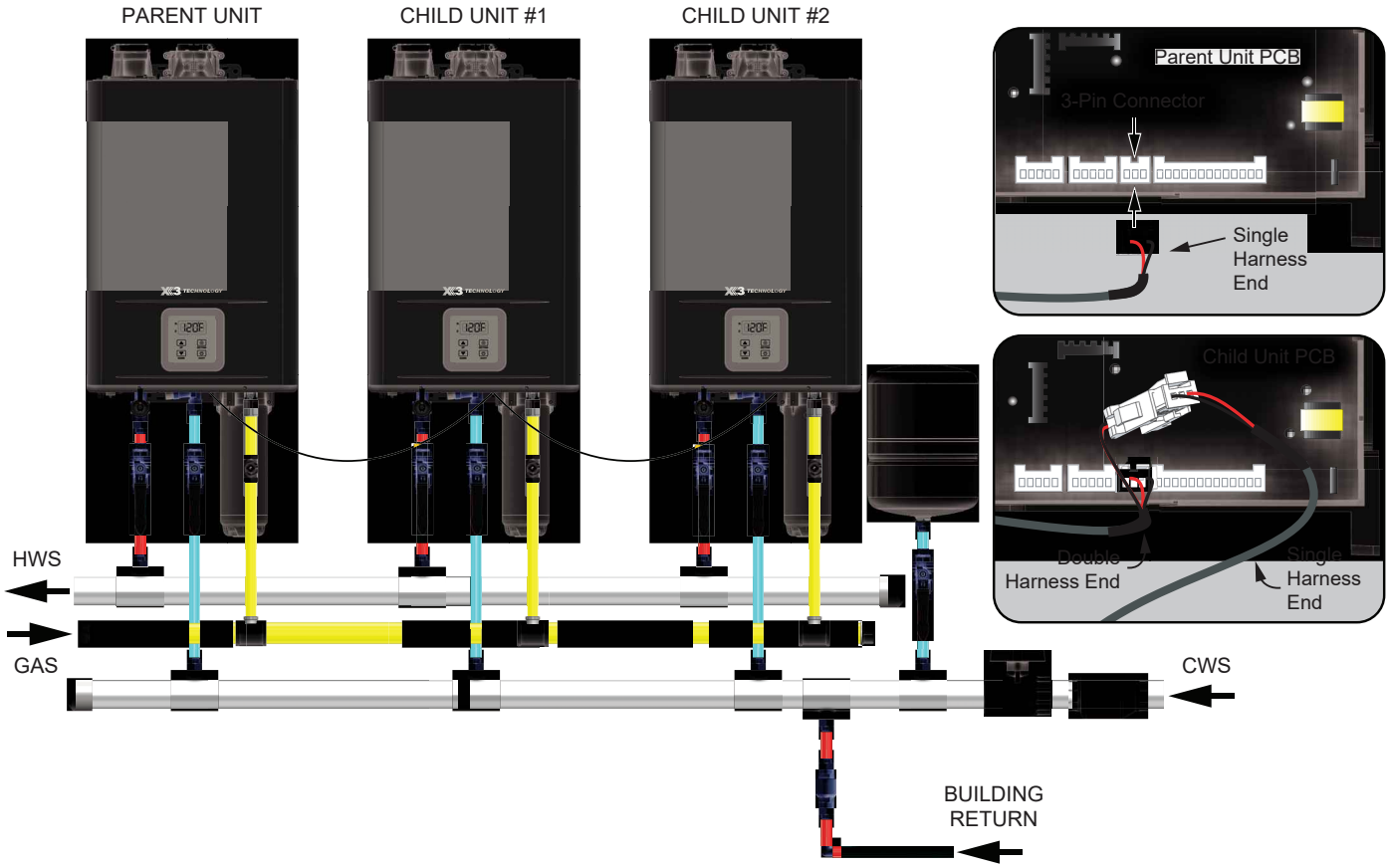

Figure 44 - Multi Unit Cascade Configuration

FOR YOUR SAFETY, READ BEFORE OPERATING

⚠ WARNING! IF YOU SMELL GAS:

- **DO NOT** try start the water heater.
- **DO NOT** touch any electric switches.
- **DO NOT** use any phone in your building.
- Immediately call your gas supplier from a neighbor's phone. Follow the gas supplier's instructions.
- If you cannot reach your gas supplier, call the fire department.
- Failure to observe these warnings could lead to fire or an explosion, resulting in severe injury or death.

✓ Check the **GAS** and **WATER CONNECTIONS** for leaks before firing unit for the first time.

✓ Open the main gas supply valve to the unit using only your hand to avoid any spark. Never use tools. If the knob will not turn by hand, **DO NOT** try to force it; call a qualified service technician. Forced repair may result in a fire or explosion due to gas leaks.

✓ Be sure to check for the presence of leaking gas toward the bottom of the unit because some gases are heavier than air and may settle towards the floor.

✓ Check the **GAS PRESSURE**. Refer to the "Gas Supply and Gas Pipe Sizing" section starting on page 35.

✓ Check for **PROPER VENTING** and **COMBUSTIBLE AIR** to the water heater.

✓ Purge the **GAS** and **WATER LINES** to remove any air pockets.

✓ **DO NOT** use this appliance if any part has been under water. Immediately contact a qualified installer or service agency to replace a flooded water heater. **DO NOT** attempt to repair the unit! It must be replaced!

Start-Up Instructions

Read and understand these directions thoroughly before attempting to start-up the water heater. Make sure the water is plumbed correctly before attempting to start-up the water heater. Check the rating plate on the right side of the water heater to ensure the correct gas type.
DO NOT use this water heater with any gas other than the one listed on the rating plate. If you have any questions or doubts, consult your gas supplier or gas utility company.

NOTICE: A newly installed water heater will have air in the gas line. It may take several attempts to clear all the air from the gas line.

1. Make sure the manual gas valve for the water heater's supply line is **ON**.
2. Plug the water heater into a grounded 120 VAC outlet, or activate the breaker/disconnect, if the water heater is hardwired.
3. The user interface will display the current temperature setting. The default is 120°F (49°C).
4. To change the set point temperature, press the "**UP**" or "**DOWN**" button to raise or lower the outlet temperature. See the "Temperature Settings" section on page 49.
5. To set the heater to the appropriate elevation, vent size and vent length, see "Configuration Mode (C Mode)" starting on page 50.

Shut-Down Instructions

Press the "**ON/OFF**" button and wait for the display to shut off.

NOTICE: The power button on the water heater and remote **DOES NOT** disconnect power to the water heater. You must physically disconnect power to the water heater.

Emergency Shut-Down

Should overheating occur or the gas supply fail to shut off, follow these steps:

1. Turn **OFF** the gas supply to the water heater at the manual shut-off valve.
2. Press the "**ON/OFF**" button on the water heater.
3. Disconnect power to the water heater by unplugging it or by turning off the circuit at the breaker box, as appropriate.
4. Call a qualified person (licensed plumber, authorized gas company personnel, or authorized service technician) for assistance.

FOR YOUR SAFETY READ BEFORE OPERATING

WARNING: If you do not follow these instructions exactly, a fire or explosion may result causing property damage, personal injury or loss of life.

A. This appliance does not have a pilot. It is equipped with an ignition device which automatically lights the burner. Do not try to light the burner by hand.

B. BEFORE OPERATING smell all around the appliance area for gas. Be sure to smell next to the floor because some gas is heavier than air and will settle on the floor.

WHAT TO DO IF YOU SMELL GAS

- **Do not try to light any appliance.**
- **Do not touch any electric switch; do not use any phone in your building.**
- **Immediately call your gas supplier from a neighbor's phone. Follow the gas supplier's instructions.**
- **If you cannot reach your gas supplier, call the fire department.**

C. Use only your hand to turn the gas shutoff valve. Never use tools. If the valve will not turn by hand, don't try to repair it. Call a qualified service technician. Force or attempted repair may result in a fire or explosion.

D. Do not use this appliance if any part has been under water. Immediately contact a qualified installer or service agency to replace a flooded water heater. Do not attempt to repair the unit! It must be replaced!

OPERATING INSTRUCTIONS

1. **STOP! Read the safety information above on this label.**
2. **Turn off all electric power to the appliance.**
3. **Do not attempt to light the burner by hand.**
4. **Turn the gas shutoff valve located on the outside of the unit to the closed position.**
5. **Wait five (5) minutes to clear out any gas. If you then smell gas, STOP! Follow "B" in the safety information above on this label. If you don't smell gas, go to the next step.**
6. **Turn the gas shutoff valve located on the outside of the unit to the open position.**
7. **Turn on all electrical power to the appliance.**
8. **If the appliance will not operate, follow the instructions in "To Turn Off Gas to Appliance," and call your service technician or gas supplier.**

TO TURN OFF GAS TO APPLIANCE

1. **Turn off all electric power to the appliance if service is to be performed.**
2. **Turn the gas shutoff valve located on the outside of the unit to the closed position.**

⚠ DANGER

⚠ **Vapors from flammable liquids will explode and catch fire causing death or severe burns.**
Do not use or store flammable products such as gasoline, solvents or adhesives in the same room or area near the water heater.

Keep flammable products:
1. Far away from heater
2. In approved containers
3. Tightly closed and
4. Out of reach of children.

Vapors:
1. Cannot be seen.
2. Are heavier than air.
3. Go a long way on the floor.
4. Can be carried from other rooms to the main burner by air currents.

Water heater has a main burner, which may come on at any time and will ignite flammable vapors.

Installation: Do not install water heater where flammable products will be stored or used unless the main burner is at least 18 in (457 mm) above the floor. This will reduce, but not eliminate the risk of vapors being ignited by the main burner.

Read and follow water heater warnings and instructions. If the owner's manual is missing, contact the retailer or manufacturer.

⚠ DANGER

1. Water temperature over 125°F (52°C) can cause severe burns instantly or death from scalds.
2. Children, disabled and elderly are at highest risk of being scalded.
3. Feel water before bathing or showering.
4. Temperature limiting valves are available. See manual.
5. To reduce the risk of scalding, install Thermostatic Mixing Valves (temperature limiting valves) at each point of use.
6. The outlet temperature of the water heater is set at 120°F (50°C). If you require water temperatures below this setting, follow the instruction manual.
7. Use this heater at your own risk. Test the water before bathing or showering. Do not leave children or an infirm person unsupervised. See your local water supply company [plumbing hardware retailer] for temperature limiting valves that are available.

A pressure relief valve listed as complying with the standard for Relief Valve and Automatic Gas Shutoff Devices for Hot Water Supply System, ANSI Z21.22 • CSA 4.4, shall be installed at the time of installation of the water heater in the location specified by the manufacturer. Local codes shall govern the installation of relief devices for safety operation of the water heater. The relief valve must not be removed or plugged.
No valve shall be placed between the relief valve and the water heater. The relief from the discharge of the pressure relief valve shall be disposed of in a suitable place where it will cause no damage. Also, there shall be no other reducing coupling or other restrictions installed on the discharge line to restrict flow.
Before operating the pressure relief valve manually, check that hot water coming out of the relief valve will discharge in a safe place to avoid contact with hot water and water damage.
See Installation Manual heading "PRESSURE RELIEF VALVES" for installation and maintenance of relief valve discharge line and other safety precautions.

California Prop 65:
⚠ **WARNING**: Cancer and Reproductive Harm - www.p65warnings.ca.gov

Figure 45 - Lighting Instructions

Display Overview

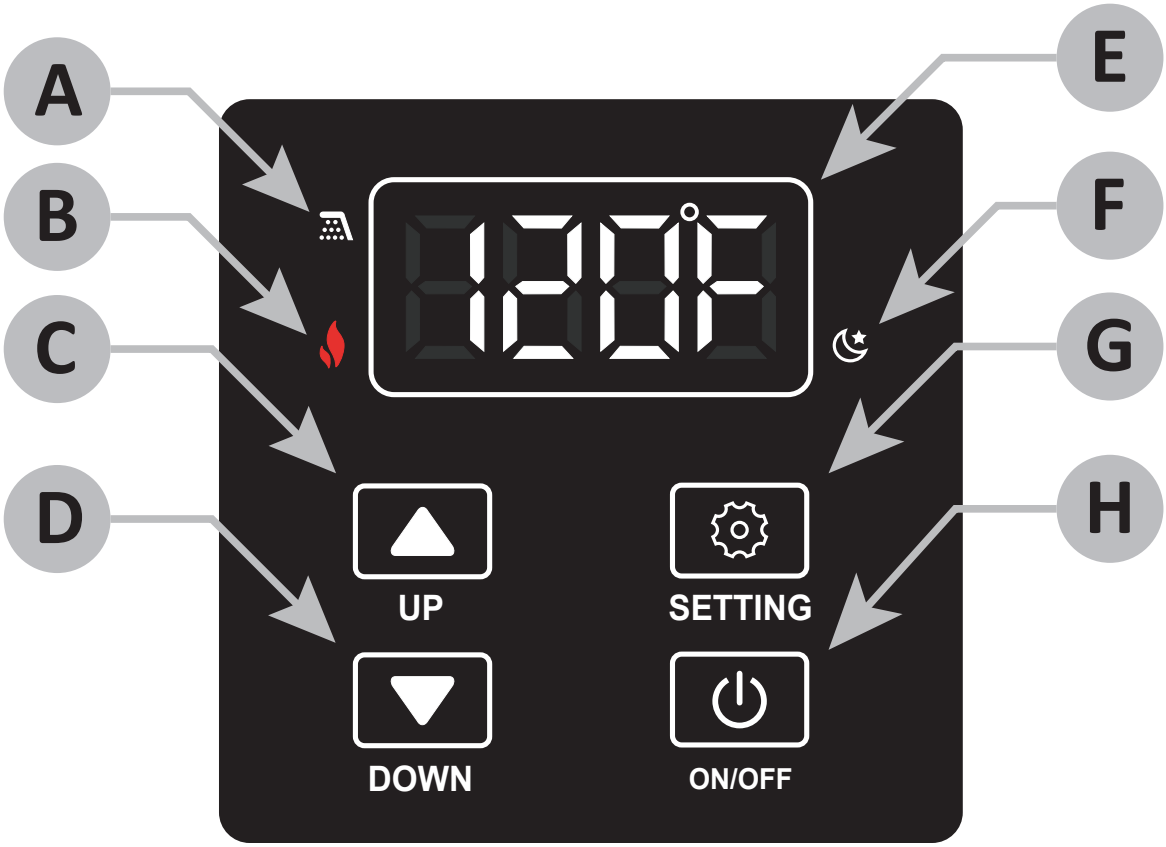

Figure 46 - User Interface Display Diagram

Table 16: User Interface Display

Item	Description
A	Water Flow Detected
B	Flame Detected
C	Up Button
D	Down Button
E	Display
F	Standby Mode
G	Setting Button
H	Operation ON/OFF Button

Temperature Settings

With the installation steps completed, you may adjust the water heater's temperature setting if desired. The water temperature set point is factory set to 120°F (49°C). The temperature set point may be increased or decreased by simply pressing the "**UP**" button or the "**DOWN**" button. To set the water heater to a temperature above 125°F (52°C), follow the procedure as outlined in Table 17:

Table 17: Set Temperature Above 125°F (52°C)

	Operation	Screen on the Controller (Built-in & Remote)
1.	Turn on the 120 VAC power supply to the unit.	
2.	Press the "**ON/OFF**" button on the controller in order to turn the controller on.	
3.	The set point temperature will display as shown in the picture on the right (Example: 120°F).	
4.	⚠ **WARNING! Higher temperatures increase the risk of scalding, but even at 120°F (49°C), hot water can scald (page 10).** Press and hold the "**SETTING**" button for 5 seconds to access the water heater Adjustment Mode (A Mode).	LONG PRESS
5.	The display will flash between code "**A00**" and the current set temperature. Short press the "**SETTING**" button to access the temperature setting. The temperature only will flash.	SHORT PRESS
6.	Press the "**UP**" button and the "**DOWN**" button to select the desired set point temperature. See Table 18 below for available set point temperatures.	
7.	Short press the "**SETTING**" button again to execute the change.	SHORT PRESS
8.	Press and hold the "**SETTING**" button for 5 seconds to return the display to normal operation. The new temperature set point will appear (Example: 130°F).	

Table 18: Water Heater Temperature Set Points

°F	100	102	104	106	108	110	115	120*	125	130	135	140
°C	38	39	40	41	42	43	46	49*	52	54	57	60

*Factory setting (Default): 120°F (49°C).

Configuration Mode (C Mode)

You can configure the water heater to accommodate your application from C Mode. Follow the procedure below to access C Mode and to properly configure the water heater for your application:

1. Press and hold the "**UP**" button and the "**SETTING**" button for 5 seconds to access C Mode.
2. Press the "**UP**" button or the "**DOWN**" button to search for the desired C Code.
3. If applicable, press the "**SETTING**" button to adjust the value of the C Code using the "**UP**" and "**DOWN**" buttons. The value will flash.
4. Press the "**SETTING**" button again to confirm the new value selected is correct.
5. Press and hold the "**UP**" button and the "**DOWN**" button for 5 seconds to return the display to normal operation.

Table 19: C Mode Altitude Settings (C01)

Code	Description	Setting	Configuration Options
C01	Altitude Settings	0	0 to 2,000 ft. (0 to 610 m) Elevation
		1	2,001 to 5,400 ft. (611 to 1,645 m) Elevation*
		2	5,401 to 7,800 ft. (1,646 to 2,377 m) Elevation*

*High altitude vent settings above 2000 (609 m) feet will impact some vent length settings. See Table 22.

Table 20: C Vent Size (CO8)

Code	Description	Setting	Configuration Options
C08	Vent Size	2	2 Inch
		3	3 Inch

Vent Length Configuration

Before operating the water heater, you must determine the correct vent length setting for your application. Reference Table 8 (page 22) and Tables 10 & 11 (pages 26-27) to calculate the total vent length for your application:

Example:

Ventilation Component	Type	Equivalent Length
Elbows (Table 8)	(1x) 87° Elbow	3 ft. (0.9 m)
Termination (Tables 9 & 10)	Polypropylene (2" Low Profile)	6 ft. (1.8 m)
Horizontal Vent Run	Polypropylene	12 ft. (3.7 m)
Vertical Vent Run	Polypropylene	3 ft. (0.9 m)
	Total Vent Length:	**24 ft. (7.3 m)**

The example to the left assumes a Power Direct Vent installation with 2 inch Polypropylene venting at sea level. Using Table 21 on the following page, the appropriate CO2 setting for 24 feet (7.2 m) of venting is **C02 = 2**.

Your Application:

Ventilation Component	Type	Equivalent Length
Elbows (Table 8)		
Termination (Tables 9 & 10)		
Horizontal Vent Run		
Vertical Vent Run		
	Total Vent Length:	

Use your total length and the information found in Tables 21 or 22 (depending on elevation) on the following page to determine the correct vent length setting based on your application.

Table 21: C Mode Vent Length Configuration (C02) for **0-2,000 ft. (0 to 610 m) Elevation**

Code	Vent Material	Vent Size	Vent Configuration	Controller Setting				
				C02 = 0	C02 = 1	C02 = 2	C02 = 3	C02 = 4
C02	PVC	2 Inch	PDV	4-7 ft. (1.2-2.1 m)	8-18 ft. (2.2-5.5 m)	19-31 ft. (5.6-9.5 m)	32-44 ft. (9.6-13.4 m)	45-50 ft. (13.5-15.2 m)
			PV	4-12 ft. (1.2-3.7 m)	13-25 ft. (3.8-7.6 m)	26-50 ft. (7.7-15.2 m)		
		3 Inch	PDV	4-20 ft. (1.2-6.1 m)	21-60 ft. (6.2-18.3 m)	61-140 ft. (18.4-42.7 m)	141-150 ft. (42.8-45.7 m)	
			PV	4-25 ft. (1.2-7.6 m)	26-80 ft. (7.7-24.4 m)	81-150 ft. (24.5-45.7 m)		
	PP	2 Inch	PDV	4-9 ft. (1.2-2.7m)	10-21 ft. (2.8-6.4 m)	22-39 ft. (6.5-11.9 m)	40-50 ft. (12.0-15.2 m)	
			PV	4-12 ft. (1.2-3.7 m)	13-30 ft. (3.8-9.1 m)	31-50 ft. (9.2-15.2 m)		
		3 Inch	PDV	4-20 ft. (1.2-6.1 m)	21-60 ft. (6.2-18.3 m)	61-140 ft. (18.4-42.7 m)	141-150 ft. (42.8-45.7 m)	
			PV	4-25 ft. (1.2-7.6 m)	26-80 ft. (7.7-24.4 m)	81-150 ft. (24.5-45.7 m)		

(PVC = Polyvinyl Chloride, PP = Polypropylene, PDV = Power Direct Vent, PV= Power Vent)

Table 22: C Mode Vent Length Configuration (C02) for **2,001-7800 ft. (611 to 2,377 m) Elevation**

Code	Vent Material	Vent Size	Vent Configuration	Controller Setting				
				C02 = 0	C02 = 1	C02 = 2	C02 = 3	C02 = 4
C02	PVC	2 Inch	PDV	4-7 ft. (1.2-2.1 m)	8-18 ft. (2.2-5.5 m)	19-31 ft. (5.6-9.5 m)	32-44 ft. (9.6-13.4 m)	45-50 ft. (13.5-15.2 m)
			PV	4-12 ft. (1.2-3.7 m)	13-25 ft. (3.8-7.6 m)	26-42 ft (7.7-12.8 m)	43-50 ft. (12.9-15.2 m)	
		3 Inch	PDV	4-25 ft. (1.2-7.6 m)	26-70 ft. (7.7-21.3 m)	71-150 ft. (21.4-45.7 m		
			PV	4-35 ft. (1.2-10.7 m)	36-120 ft. (10.8-36.6 m)	121-150 ft. (36.7-45.7 m)		
	PP	2 Inch	PDV	4-9 ft. (1.2-2.7m)	10-21 ft. (2.8-6.4 m)	22-39 ft. (6.5-11.9 m)	40-50 ft. (12.0-15.2 m)	
			PV	4-12 ft. (1.2-3.7 m)	13-30 ft. (3.8-9.1 m)	31-50 ft. (9.2-15.2 m)		
		3 Inch	PDV	4-25 ft. (1.2-7.6 m)	26-70 ft. (7.7-21.3 m)	71-150 ft. (21.4-45.7 m		
			PV	4-35 ft. (1.2-10.7 m)	36-120 ft. (10.8-36.6 m)	121-150 ft. (36.7-45.7 m)		

(PVC = Polyvinyl Chloride, PP = Polypropylene, PDV = Power Direct Vent, PV= Power Vent)

Table 23: C Mode Cascade System (C13 & C14)

Code	Description	Setting	Configuration Options
C13	Number of Child Units in Cascade System	0: 1-11:	No Cascade System (default). Identify number of Child Units. This activates the Cascade System.
C14	Cascade System Heater ID Number	1: 2-12	Parent Heater (default). Individually set each Child Unit per user preference.

Unit Conversion Mode

Units of measure can be changed from Imperial to Metric and vice versa. For example, temperature can be changed from °F to °C. Flow rate will also change from gallons per minute to liters per minute when this setting is changed. Follow this procedure to change this setting:

Table 24: Convert Units

	Operation	Screen on the Controller (Built-in & Remote)
1.	Turn on the 120 VAC power supply to the unit.	
2.	Press the "**ON/OFF**" button on the controller in order to turn the controller on.	
3.	The set point temperature will display as shown in the picture on the right (Example: 120°F).	
4.	Press and hold the "**SETTING**" button for 5 seconds to access the water heater Adjustment Mode (A Mode).	LONG PRESS
5.	The display will flash between code "**A00**" and the current set temperature. Press the "**UP**" or "**DOWN**" button once and the display will show code "**A01**." Short press the "**SETTING**" button to show the current temperature setting. The temperature will flash.	SHORT PRESS
6.	Press the "**UP**" button and the "**DOWN**" button to alternate between Fahrenheit and Celsius.	
7.	Short press the "**SETTING**" button again to execute the change.	SHORT PRESS
8.	Long press the "**SETTING**" to return the display to normal operation. The new temperature set point will appear in the selected unit (Example: 49°C).	

Regular Maintenance

⚠ WARNING! Turn OFF the electrical power supply and close the manual gas shut-off valve and the manual water control valve before servicing. Failure to do so could result in serious personal injury or death.

Routine maintenance will help your water heater last longer and work better. Failure to perform required or recommended maintenance may void the warranty. If you cannot perform these routine maintenance tasks yourself, contact a qualified person:

The manufacturer recommends having the unit checked once a year or as necessary by a licensed technician or qualified person. If repairs are needed, any repairs should be done by a licensed technician.

- Clean the cold-water inlet filter.
- The intake and venting system should be checked annually for any leaks, corrosion, blockages, or damage. Replace any damaged section of venting and clear any blockage.
- The venting system should be checked annually for any leaks, corrosion, blockages or damage. Replace any damaged section of venting and clear any blockages.
- Keep the area around the water heater and terminations clear. Regularly ensure that the area around the water heater, vent termination, and air intake is free from dust, debris, and other contaminants. Remove any combustible materials, gasoline, flammable vapors, and liquids.
- If the pressure relief valve discharges periodically, it may be due to thermal expansion in a closed water supply system. Contact the water supplier or local plumbing inspector on how to correct this situation.
- The pressure relief valve must be manually operated periodically to check for correct operation. Before operating the valve manually, check that it will discharge in a place for secure disposal.
- The condensate drain system must be inspected regularly that it drains properly in accordance with local codes or the manufacturer's instructions.
- The burner should be checked annually for dust, lint, grease or dirt.
- Visually check the burner flames through the burner window (sight glass) on the burner assembly. The burner assembly is located in the middle of the water heater. A properly operating burner should produce clear, blue, stable flames. The flames should not be lifting above the burner. Contaminated air may cause a discolored flame. Contact a qualified technician if the flame is not satisfactory. See Figure 47 below for burner flame reference.

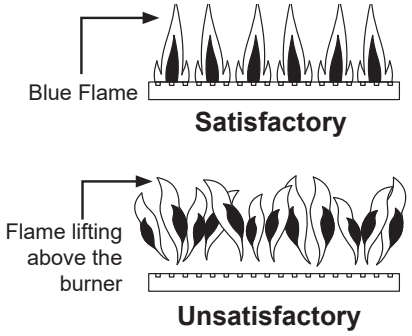

Figure 47 - Check Burner Flames

Freeze Protection System

This unit comes equipped with heating blocks to protect it from damage associated with freezing. The auto-fire mode activates the burner for a short period of time.

For this freeze protection system to operate, there must be electrical power to the unit. Damage to the heat exchanger caused by freezing temperatures due to power loss is not covered under the warranty. In cases where power losses can occur, consider the use of a backup power supply.

It is the installer's responsibility to be aware of freezing issues and take all preventative measures. The manufacturer will not be responsible for any damage to the heat exchanger as a result of freezing.

NOTICE: Only pipes within the water heater are protected by the freeze protection system. Any water pipes (hot or cold) located outside the unit will not be protected. Properly protect and insulate these pipes from freezing. See “Available Accessories” on page 15 for the Cartridge Freeze Protection Kit. This kit is available for both the X3® Models and M Models.

If you will not be using your heater for a long period of time or power has been lost during freezing conditions:

1. Completely drain the water out of the unit. See the "Unit Draining & Power Outage (Freeze Protection)" section on page 54.
2. Disconnect power to your water heater.

Unit Draining & Power Outage (Freeze Protection)

1. Close the manual gas shut-off valve.
2. Disconnect power to the water heater by unplugging it or by turning off the circuit at the breaker box.
3. Close the cold inlet water valve.
4. Open all hot water taps in the house. When the residual water flow has ceased, close all hot water taps.
5. Drain the X3® (or Bypass) Cartridge: Have a bucket or pan to catch water from the X3® Cartridge. To remove the X3® Cartridge, remove and keep the 3 screws securing the cartridge in place. Pull down to remove it from the water heater. Empty the water out of the cartridge into the bucket.
6. Wait a few minutes to ensure all water has completely drained from the unit.
7. Keep the cold water valve closed. Keep the gas valve closed. Keep supply power disconnected.
8. To restore the unit to operation, reinstall the X3® Cartridge with 3 screws removed earlier. For detailed instructions see "X3® Cartridge Installation" on page 38.
9. Open the cold inlet water valve. Check all water connections for leaks. If leaks are found, shut off the cold water inlet valve and immediately fix any leaks. If no leaks are present proceed to the next step.
10. Reconnect power to the water heater.
11. Open the manual gas shut-off to the water heater.
12. If the set temperature is not displayed, press the **ON/OFF** button.

NOTICE: If any errors occur, shut off the water immediately.

Discharge Condensate

1. Inspect the drain lines for any clogs and clear.
2. Check the drain lines for a downward slope. Correct any lines where water does not drain freely.
3. Inspect the built-in condensate trap drain lines for debris. Disconnect the lines and drain to remove the debris.
4. If a neutralizer is installed, check the pH level. Replace the neutralizer if the pH of the outlet water is below 6.0.
5. If this filter is clogged, water will not be supplied to the water heater properly.

Inlet Water Filter

1. Close the manual gas shut-off valve.
2. Disconnect power to the water heater by unplugging it or by turning off the circuit at the breaker box.
3. Close the inlet water valve.
4. Open all hot water taps in the house. When the residual water flow has ceased, close all hot water taps.
5. Drain the X3® (or Bypass) Cartridge: Have a bucket or pan to catch water from the X3® Cartridge. To remove the X3® Cartridge, remove and keep the 3 screws securing the cartridge in place. Pull down to remove it from the water heater. Empty the water out of the cartridge into the bucket.
6. Wait a few minutes to ensure all water has completely drained from the unit.
7. Unscrew the inlet water filter and remove it from the water heater.
8. Clean the filter: Check the water filter located within the cold inlet. With a tiny brush, clean the water filter of any debris which may have accumulated.
9. Screw the inlet water filter back into place. Hand- tighten only.

NOTICE: Handle with care and verify the O-ring is not dirty or damaged.

10. To restore the unit to operation, reinstall the X3® Cartridge with 3 screws removed earlier. For detailed instructions see "X3® Cartridge Installation" on page 38.
11. Turn **ON** the cold water supply to the water heater at the cold inlet valve. The system will fully pressurize and any leaks at water connections will be apparent. Correct any leaks immediately.
12. Turn **ON** the gas supply to the water heater at the manual gas shut off valve.
13. Restore power to the water heater. The water heater is now ready for operation.

General Troubleshooting

If the water heater is experiencing issues, please check the following. After checking, consult with a qualified person.

Table 25: Troubleshooting Chart

	Problem	Solutions
Temperature and Amount of Hot Water	It takes a long time to get hot water at the fixtures.	• The times it takes to deliver hot water from the water heater to your fixtures depends on the length of piping between the two. The longer the distance or the bigger the pipes, the longer it will take to get hot water. • If you would like to receive hot water to your fixtures more quickly, you may want to consider a hot water recirculation system.
	The water is not hot enough.	• Check the set temperature of the water heater and adjust, if necessary. • Check cross plumbing between the cold water lines and hot water lines. • Is the gas supply valve open fully? • Is the gas line sized properly? • Is the gas supply pressure sufficient? • Check if the Point-of-Use mixing valves are set correctly if they are installed.
	The water is too hot.	• Is the set point temperature set too high?
	The hot water is not available when a fixture is opened.	• Make sure the unit has 120 VAC, 60 Hz power supply and power frequency is set to 60 hz. • Verify the operation setting is **ON** by viewing the UIM. If the set temperature is showing or you press the **UP** arrow to display the set temperature, then the operation setting is **ON**. If the display is blank and nothing appears when pressing the UP button, then the operation state is set to **OFF**. Press the **ON/OFF** button to activate the heater. The set temperature will display when set to **ON**. • Is the gas supply valve open fully and within the allowable gas pressure range? • Is the water supply valve fully open? • Is the filter on the cold water inlet clean? • Is the hot water fixture sufficiently open to draw at least 0.4 GPM (1.5 L/min) through the water heater? • Is the unit frozen?
	The hot water runs cold and stays cold.	• Is the flow rate enough to keep the water heater running? • If there is a recirculation system installed, does the recirculation line have enough check valves? • Is the gas supply valve fully open? • Is the filter on the cold water inlet clean? • Are the fixtures clean of debris and obstructions?
	Fluctuation in hot water temperature.	• Is the filter on the cold water inlet clean? • Is the gas line sized properly? • Is the gas supply pressure sufficient? • Check for cross connection between cold water lines and hot water lines.

TROUBLESHOOTING

Table 25: Troubleshooting Chart

	Problem	Solutions
Water Heater	Unit does not ignite when water goes through the unit.	• Is the flow rate over 0.4 GPM (1.5 L/min)? • Check the filter on the cold water inlet. • Check for reverse connections and cross connection. • If you use the remote controller and/or built-in controller, is the power button turned on? • Check if the inlet water temperature is too high. If it is too close to the set temperature, the water heater will not activate.
	The fan motor is still spinning after operation has stopped.	• This is normal. After operation has stopped, the fan motor keeps running to re-ignite quickly, as well as purge all the exhaust gas out of the flue.
	Unit sounds abnormal while in operation.	• Contact Technical Support Department.

Error Codes

The water heater has self-diagnostic functions for safety and convenience when troubleshooting.

If there is a problem with the installation or the unit, the error code associated with that failure will be displayed on the built-in controller or remote controller.

Consult the Table 26 on the following pages for the description of each error code.

Single Unit Installation (Example)

If your water heater has the "**E002**" error code (which signifies a high limit break):

- Indicator on the built-in and/or remote controller will display "**E002**" on the screen.

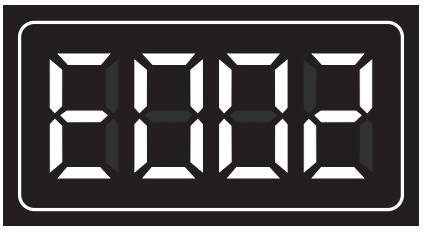

Figure 48 - Single Unit Error Code Example

Cascade System (Example)

Error codes will be displayed differently with units installed within a Cascade System, not only to show what the error code is, but to also indicate which unit within the system has the error code. Below is a sample of how the error code "**E002**" is displayed in a Cascade System.

If Unit #2 has the "**E002**" error code (which signifies a high limit break):

- Indicator on the built-in and/or remote controller of Parent unit will intermittently flash "**E002**" and "**2**."

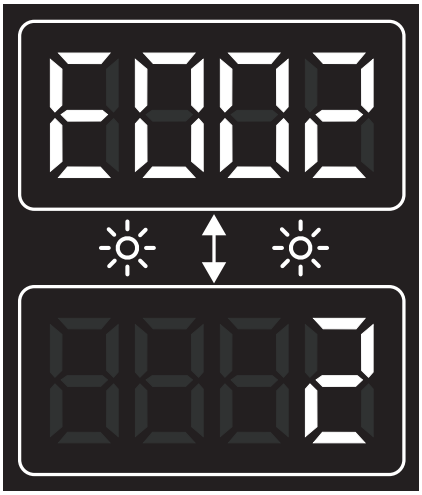

Figure 49 - Cascade System Error Code Example (Parent Unit)

- Child unit #2 will intermittently flash "**E002**"on the display.

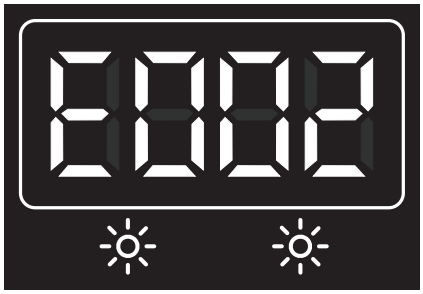

Figure 50 - Cascade System Error Code Example (Child Unit)

- Child unit #3 & #4 will not display anything, as the error code does not pertain to them.

Fault Analysis of Error Codes

If the water heater is displaying an error code, please check the following. After checking, consult with the manufacturer.

Table 26: Error Code Fault Analysis

Error Code	Error Description	Procedure
E002	High Limit Break	Manual Hi-Limit Switch located on heat exchanger tripped. Check Hi-limit switch for proper operation. Pressing the reset button (center of the switch), will reset the Hi-limit switch. **NOTICE:** If the Hi-Limit switch has tripped, you will hear and feel it click when resetting it. If the high limit switch continues to trip, contact a qualified service technician.
E006	PCB Hardware Fault - AD Converter Fault	Check PCB wiring for loose, damaged or cut wires/connectors. Correct any loose connection and replace any damaged wires/connectors. If all wires/connectors are intact, replace the PCB.
E010	Frequency Fault	PCB has detected an incorrect power supply frequency. Note the default frequency is 60 Hz. See instructions on page 50 to access C Mode. Confirm C07 displays 60. If the setting is correct and the error still occurs, contact a qualified service technician.
E011	PCB Hardware Fault - Memory Error	The water heater will continue to operate while this error code is flashing. If this heater is part of a cascade system, then the system will be affected based on the heater's setting. • Parent Heater: The cascade system will not operate. Remove this heater from the cascade system and set a different heater as the Parent. • Child Heater: This heater will not operate. The rest of the cascade system will continue to run.
E036	Flame Failure	**WARNING! Working on an energized circuit can result in severe injury or death from electrical shock.** Check the flame sensor wire for a short or disconnection. Correct any loose connection and replace any damaged wire/connector. If the error still occurs, contact a qualified service technician.
E037	False Flame Detection.	**WARNING! Working on an energized circuit can result in severe injury or death from electrical shock.** 1. Check for a visible flame through the sight glass while water is not running through the water heater. If error still occurs, immediately shut off the water heater and contact a qualified service technician. 2. Check the flame sensor wire for a short or disconnection. Correct any loose connection and replace any damaged wire/connector. If the error still occurs, contact a qualified service technician.

Table 26: Error Code Fault Analysis

Error Code	Error Description	Procedure
E038	Ignition Failure	**WARNING! Working on an energized circuit can result in severe injury or death from electrical shock.** 1. Check for a visible flame through the sight glass. 2. Check the flame sensor wire for a short or disconnection. Correct any loose connection and replace any damaged wire/connector. If the error still occurs, contact a qualified service technician.
E041	Outlet Water Over-temp	1. Verify the thermistor reading with the water outlet temperature. 2. Remove the outlet thermistor (do not lose the O-ring) and check for any dirt or debris. Clean with an Emery cloth. If the thermistor is damaged, replace it. If the error still occurs, contact a qualified service technician.
E049	Exhaust Thermistor Failure	1. Remove the thermistor (do not lose the O-ring) and check for any dirt or debris. Clean with an Emory cloth. If the thermistor is damaged, replace it. 2. Check the Thermistor sensor wire for a short or disconnection. Correct any loose connection and replace any damaged wire/connector. If the error still occurs, contact a qualified service technician.
E050	Inlet Thermistor Failure	1. Remove the thermistor (do not lose the O-ring) and check for any dirt or debris. Clean with an Emory cloth. If the thermistor is damaged, replace it. 2. Check the Thermistor sensor wire for a short or disconnection. Correct any loose connection and replace any damaged wire/connector. If the error still occurs, contact a qualified service technician.
E051	Outlet Thermistor Failure	1. Remove the thermistor (do not lose the O-ring) and check for any dirt or debris. Clean with an Emory cloth. If the thermistor is damaged, replace it. 2. Check the Thermistor sensor wire for a short or disconnection. Correct any loose connection and replace any damaged wire/connector. If the error still occurs, contact a qualified service technician.
E052	Heat Exchanger Thermistor Failure	1. Remove the thermistor (do not lose the O-ring) and check for any dirt or debris. Clean with an Emory cloth. If the thermistor is damaged, replace it. 2. Check the Thermistor sensor wire for a short or disconnection. Correct any loose connection and replace any damaged wire/connector. If the error still occurs, contact a qualified service technician.
E381	Combustion Blockage	Press **ON/OFF** button. If error persists, contact a qualified service technician.
E382	Abnormal Proportional Valve Current	Press **ON/OFF** button. If error persists, contact a qualified service technician.

Table 26: Error Code Fault Analysis

Error Code	Error Description	Procedure
E383	Inlet Water Over-temp	1. Verify the inlet water temperature is not above the water heater's set temperature. 2. Remove the thermistor (do not lose the O-ring) and check for any dirt or debris. Clean with an Emory cloth. If the thermistor is damaged, replace it. 3. Check the Thermistor sensor wire for a short or disconnection. Correct any loose connection and replace any damaged wire/connector. If the error still occurs, contact a qualified service technician.
E385	Main Gas Solenoid Valve Drive Circuit Failure	Press **ON/OFF** button. If error persists, contact a qualified service technician.
E388	Bypass Valve Fault	1. Correct any loose connection and replace any damaged wire/connector. 2. Follow the draining procedure on page 54 to properly drain the water heater. Remove the bypass valve and inspect for any debris or damage. Replace if needed.
E389	Fan Current AD Failure	Press **ON/OFF** button. If error persists, contact a qualified service technician.
E390	Fan Over Max Current without Speed	Press **ON/OFF** button. If error persists, contact a qualified service technician.
E391	Fan Over Max Current with Speed	Press **ON/OFF** button. If error persists, contact a qualified service technician.
E392	Fan False Start	Check the fan motor wiring. Correct any loose connection and replace any damaged wire/connector. If the error still occurs, contact a qualified service technician.
E393	Fan Signal Loss	Check the fan motor wiring. Correct any loose connection and replace any damaged wire/connector. If the error still occurs, contact a qualified service technician.
E394	Fan Target Speed	1. Check the fan motor wiring. Correct any loose connection and replace any damaged wire/connector. 2. With the water heater power disconnected, check the exhaust vent and air intake piping for any blockages. Remove any blockages. If the error still occurs, contact a qualified service technician.
E395	Fan Current without Drive	Press **ON/OFF** button. If error persists, contact a qualified service technician.
E400	Communication Fault with UIM	Check the UIM wiring. Correct any loose connection and replace any damaged wire/connector. If the error still occurs, contact a qualified service technician.

Table 26: Error Code Fault Analysis

Error Code	Error Description	Procedure
E401	Communication Fault with Remote Controller	1. Check the Remote Controller wiring. Correct any loose connections and replace any damaged wire/connector. 2. Only one remote controller can be installed, remove any additional remote controllers. 3. If the error still occurs, contact a qualified service technician.
E402	Communication Fault in Cascade System	1. Check the Cascade wiring. Correct any loose connections and replace any damaged wire/connector. 2. Cycle the heater's power **OFF/ON** if the cascade wiring was disconnected while the system still had power. 3. If the error still occurs, contact a qualified service technician.
E403	Inconsistent Models in Cascade-Link	Confirm all units in Cascade System are the same model. All models in the cascade system must be the same.
E412	PCB Hardware Fault - Flame Circuit Failure	Contact a qualified service technician to replace the PCB.
E413	Flame Sensor Fault	1. Check the flame sensor wire for a short or disconnection. Correct any loose connection and replace any damaged wire/connector. 2. With the water heater power disconnected, check the exhaust vent and air intake piping for any blockages. Remove any blockages. 3. Verify the water heater has sufficient combustion air. Reference the Combustion and Venting Installation section of the manual. 4. Check the installation area for corrosive elements. Reference the Installation Environment section in the manual. 5. If the error still occurs, contact a qualified service technician.
E414	PCB - Flame Sensor Circuit	1. Check the flame sensor wire for a short or disconnection. Correct any loose connection and replace any damaged wire/connector. 2. If the error still occurs, contact a qualified service technician to replace the PCB.
E416	Analog/Digital (AD) Value Fault	1. Check the outlet thermistor sensor wire for a short or disconnection. Correct any loose connections and replace any damaged wire/connector. If the error still occurs, contact a qualified service technician. 2. Remove the outlet thermistor (do not lose the O-ring) and check for any dirt or debris. Clean with an Emery cloth. If the thermistor is damaged, replace it. 3. If the error still occurs, contact a qualified service technician to replace the PCB.

Table 26: Error Code Fault Analysis

Error Code	Error Description	Procedure
E418	Exhaust High Temperature	1. With the water heater power disconnected, check the exhaust vent and air intake piping for any blockages. Remove any blockages. 2. Remove the thermistor (do not lose the O-ring) and check for any dirt or debris clean with Emory cloth. If the thermistor is damaged, replace it. 3. If the error still occurs, contact a qualified service technician.
E419	Flame Signal Lost	1. Cycle the heater's power **OFF/ON**. 2. If the error still occurs, contact a qualified service technician.
E426	Condensate Drain Overflow	1. Place a bucket under the water heater to catch any water. 2. With the water heater off, check the condensate drain for any blockages. Remove any blockages. 3. Check the condensate drain wires for a short or disconnection. Correct any loose connection and replace any damaged wire/connector. 4. Verify the condensate drain line is installed correctly (reference page 40).
E427	Flow Control Valve	1. Check the flow control valve wires for a short or disconnection. Correct any loose connections and replace any damaged wire/connector. 2. Remove the flow control valve and inspect for any debris or damage. Replace if needed. First follow the draining procedure in the Unit Draining & Power Outage section in this manual.
E428	Flow Sensor - Cascade Only	1. Verify the water heater's operation is enabled. The heater's UIM will display the set temperature when enabled. If it is disabled, press the heater's **ON/OFF** button to enable the heater's operation. 2. Verify that the heater's water shutoff valves are open. 3. Check the flow sensor wires for a short or disconnection. Correct any loose connections and replace any damaged wire/connector. 4. Drain the water heater following Unit Draining & Power Outage section in this manual. 5. Remove the flow sensor and inspect for any debris or damage. Replace if needed. 6. Remove and clean the inlet water filter.

Table 26: Error Code Fault Analysis

Error Code	Error Description	Procedure
E429	Flow Control Valve Fault - Cascade Only	1. Check the flow control valve wires for a short or disconnection. Correct any loose connections and replace any damaged wire/connector. 2. Remove the flow control valve and inspect for any debris or damage. Replace if needed. First follow the draining procedure in the Unit Draining & Power Outage section in this manual.

COMPONENT LIST

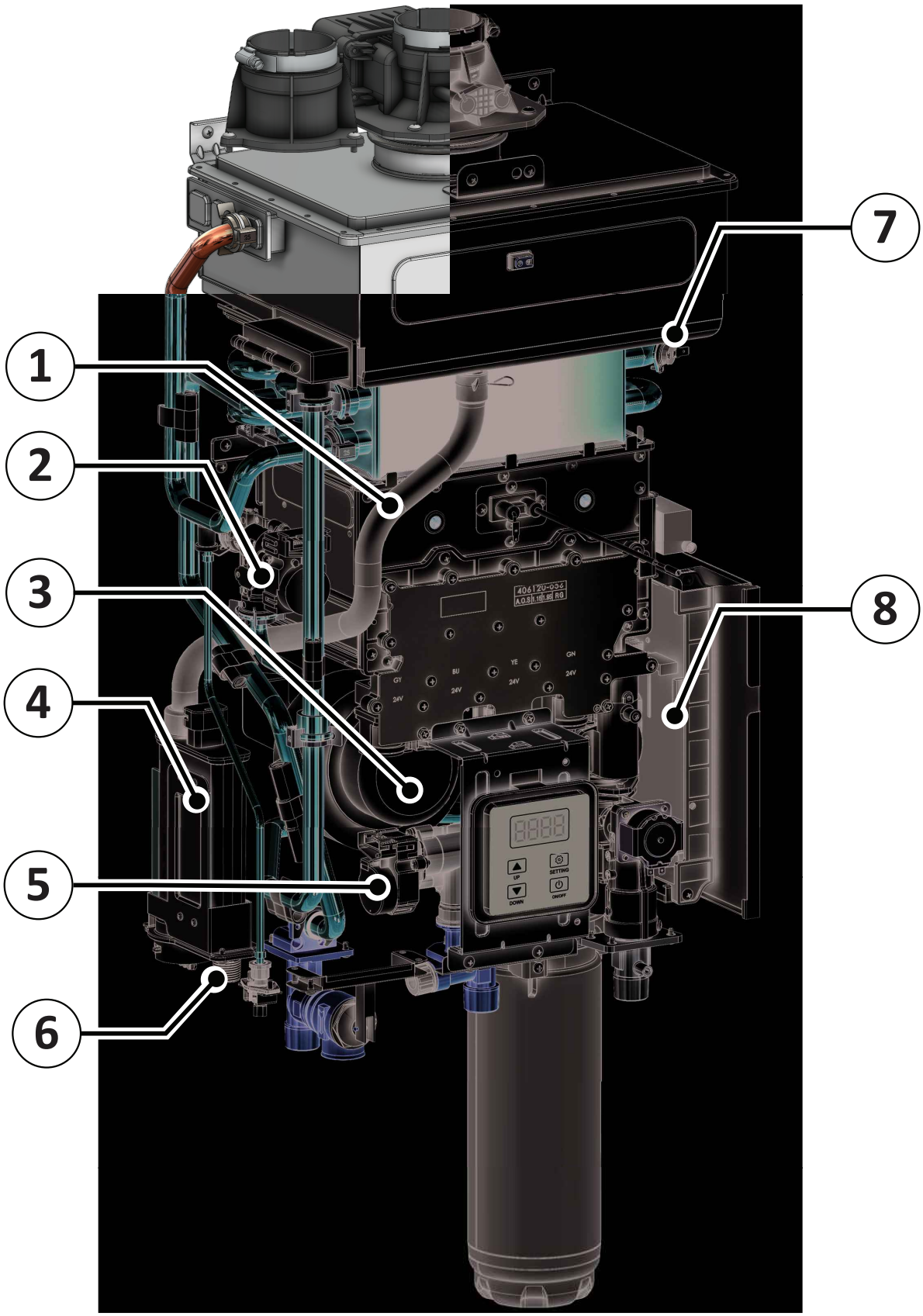

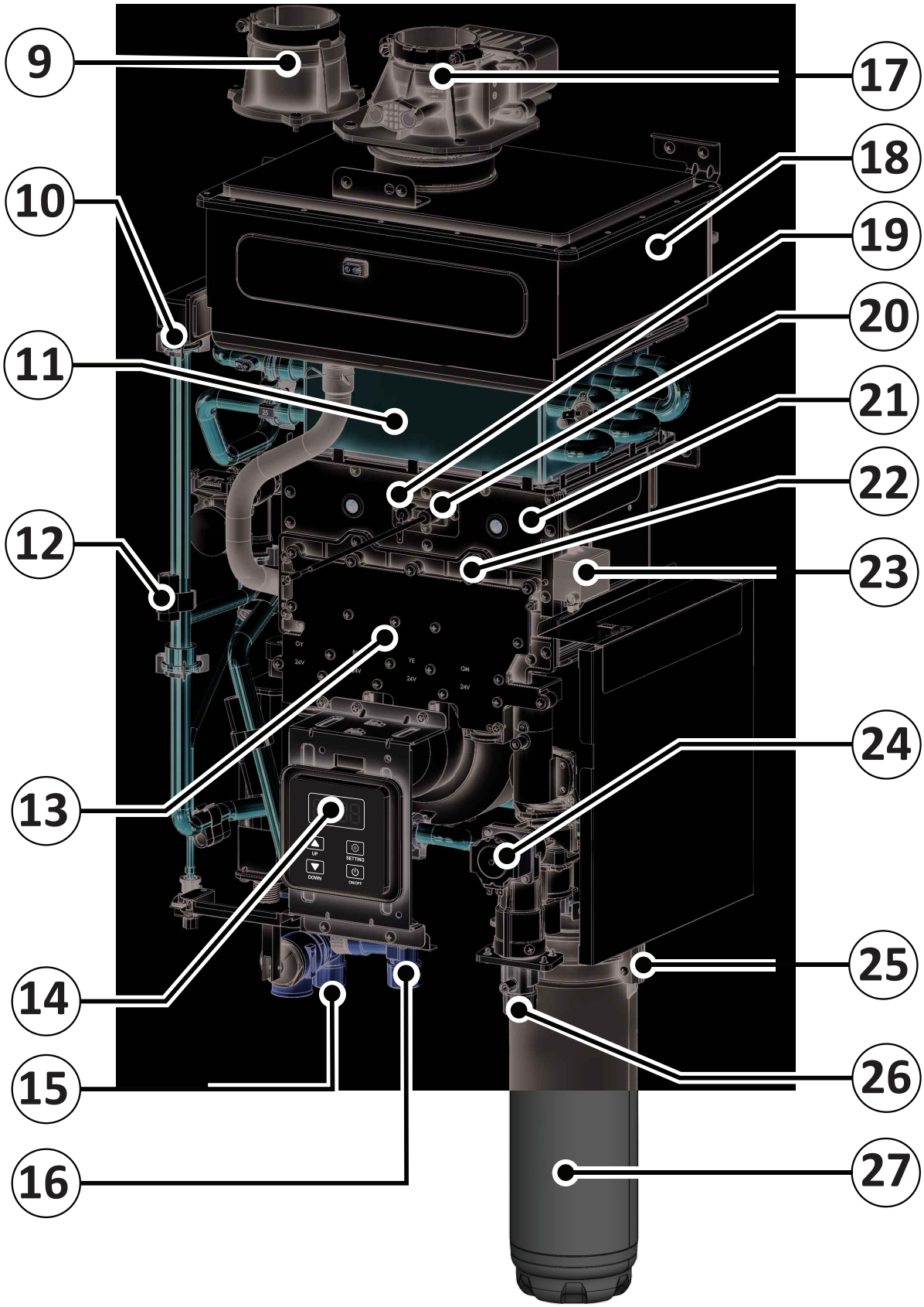
9
10
11
12
13
14
15
16
17
18
19
20
21
22
23
24
25
26
27
UP
DOWN
SETTING
ON/OFF

COMPONENT LIST

When ordering repair parts, always give the following information:

1. Model, serial, and product number. This info should be on the left side of the water heater.
2. Item number.
3. Parts description.

Table 27: Repair Parts List

Item No.	Component List
1	Condensate Tubing (right view)
2	Bypass Water Valve
3	Blower
4	Condensate Trap
5	Main Water Valve
6	Condensate Drain Connection
7	Hi-Limit Switch
8	Printed Circuit Board
9	Intake Connection
10	Water Tube Retainer Clip
11	Primary Heat Exchanger
12	Freeze Protection
13	Manifold Cover
14	Display/Controller
15	Hot Water Outlet
16	Cold Water Inlet
17	Exhaust Connection
18	Secondary Heat Exchanger
19	Flame Sensor
20	Igniter
21	Burner
22	Manifold
23	Igniter Relay
24	Gas Valve
25	Cartridge Manifold (X3® or Bypass)
26	3/4" Gas Connection
27	X3® Cartridge/Bypass Cartridge (X3® shown)

Flow Rate Capacity Chart

The chart is based on a properly sized gas line and installation at 0-2,000 ft. (0-610 m). The water heater will de-rate approximately 3% (NG) per 1,000 ft. (305 m) of elevation increase above 2,000 ft. (610 m).

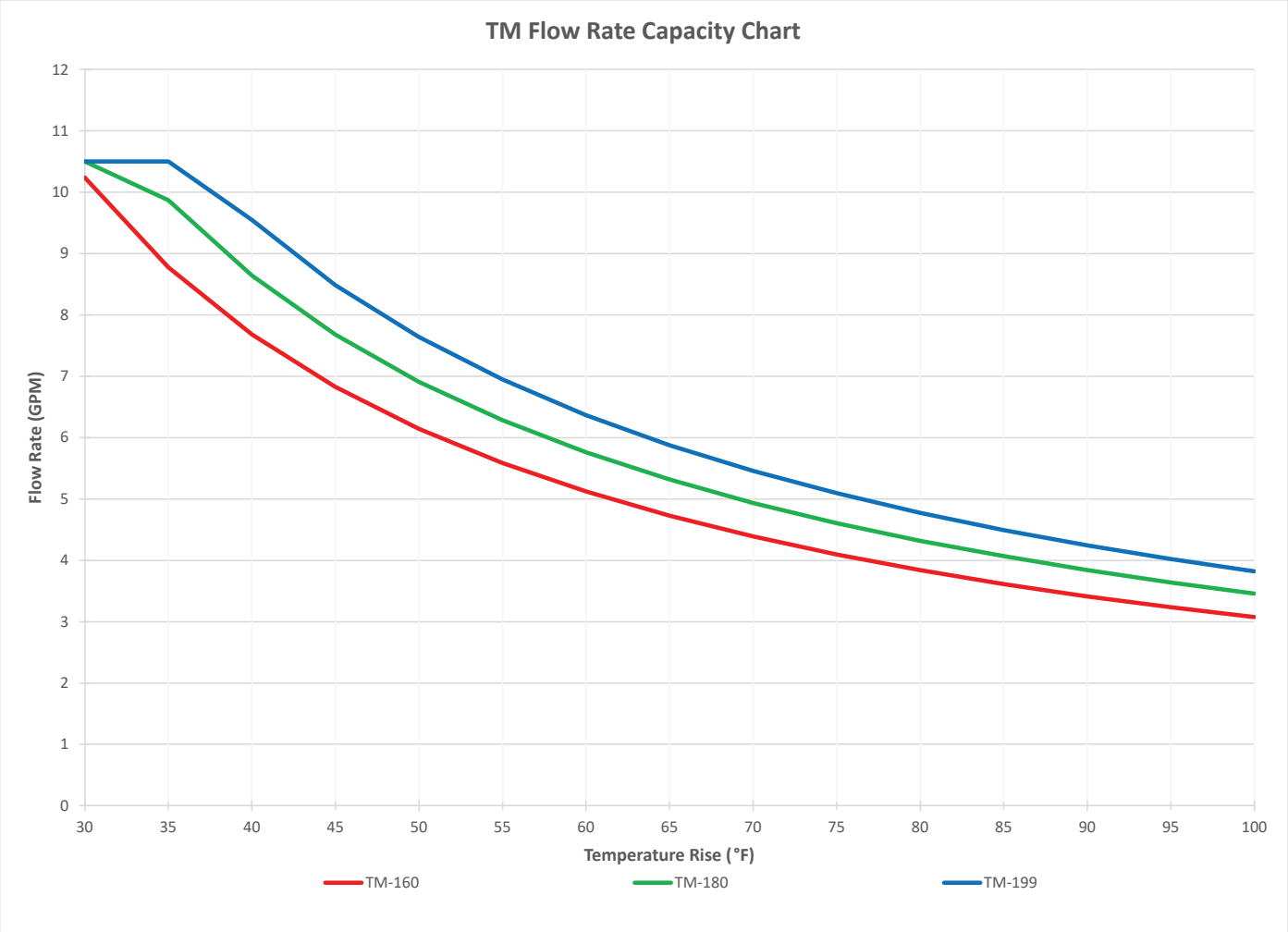

Copyright © 2025, A.O. Smith.
All Rights Reserved