AXOR

Brand	AXOR
Art. Name	**AXOR Montreux** Widespread Faucet 30 with Cross Handles and Pop-Up Drain, 1.2 GPM
Art. Nr.	16536251
Surface	Brushed Gold Optic
Pos.	1

Product Picture

Drawing

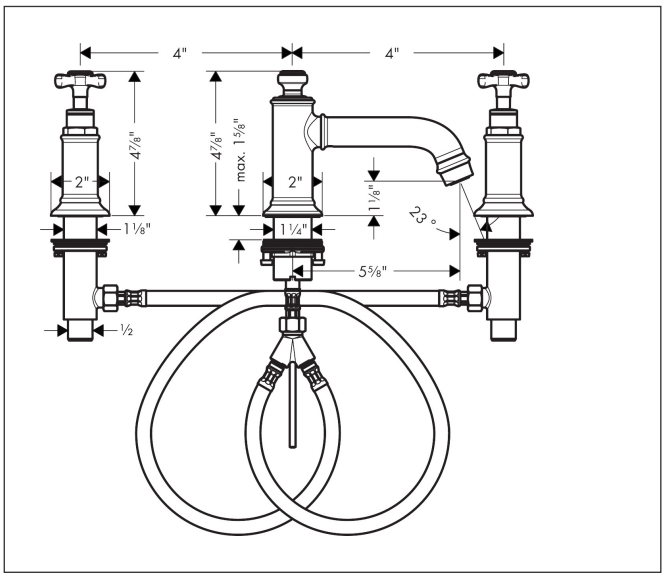

Features

- Handle design: lever handle
- Spray pattern: Laminar spray
- Maximum flow rate (at 3 bar): 4.5 l/min
- Ceramic valves hot/cold 90°
- Pop-up drain G 1

Technology

Comfort Zone

EcoRight