AXOR

Brand	AXOR
Art. Name	**AXOR Citterio** Single-Hole Faucet 90 with Pop-Up Drain- Rhombic Cut, 1.2 GPM
Art. Nr.	39001821
Surface	Brushed Nickel
Pos.	1

Product Picture

Drawing

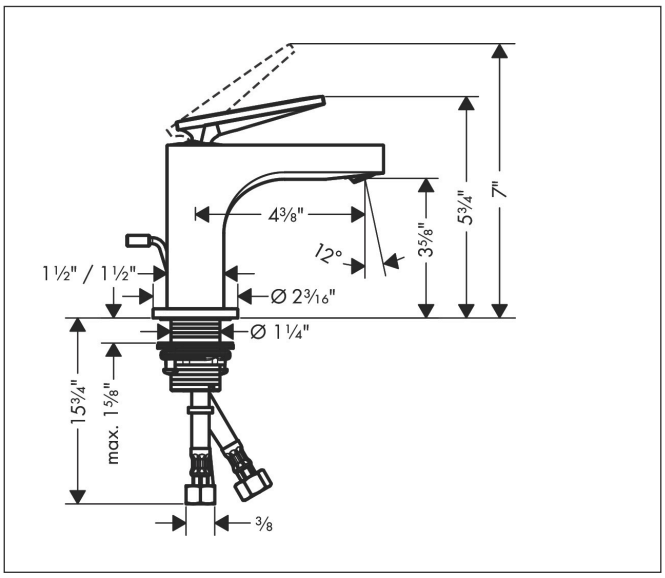

Features

- Consists of: single-hole lavatory faucet, drain valve set
- Handle design: lever handle
- Spray pattern: Laminar spray
- Swiveling spray former
- Maximum flow rate (at 3 bar): 4.5 l/min
- Ceramic cartridge
- Pop-up drain G 1

Technology

Comfort Zone

Quick Clean

EcoRight