AXOR

hansgrohe

Brand	AXOR
Art. Name	**AXOR One** Widespread Faucet 170, 1.2 GPM
Art. Nr.	48050701
Product Finish	Matte White
Pos.	31

Product Picture

Drawing

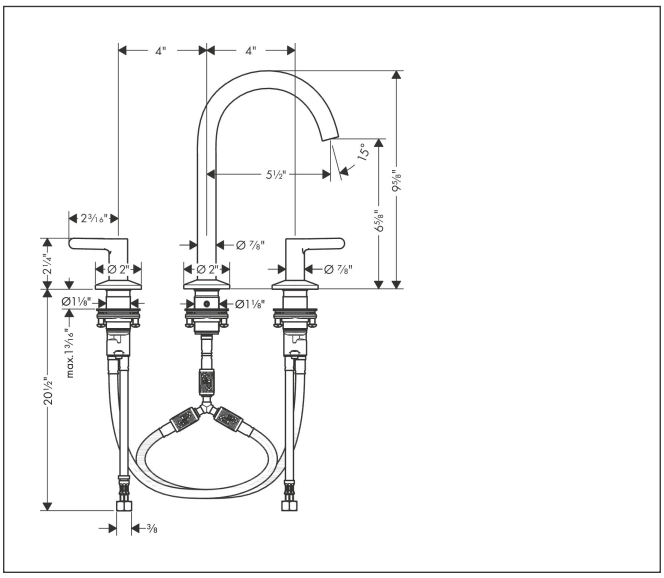

Features

- Handle variant: Lever
- Swivel range 120°
- Spray modes: aerated spray
- Flow: 1.2 GPM (4.5 L/Min)
- Ceramic valves hot/cold 90°

Technology