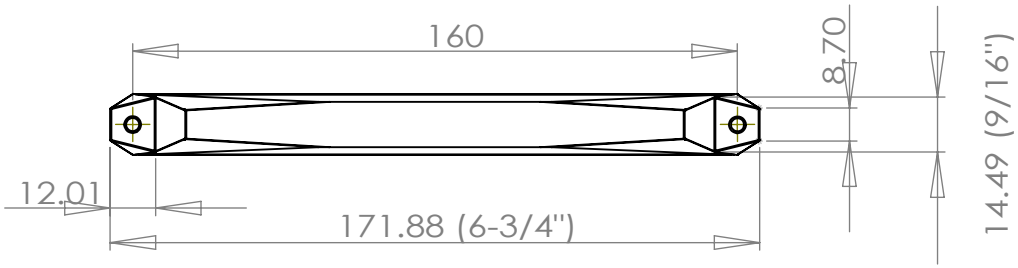

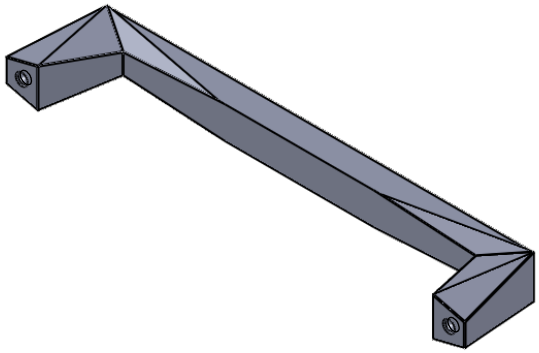

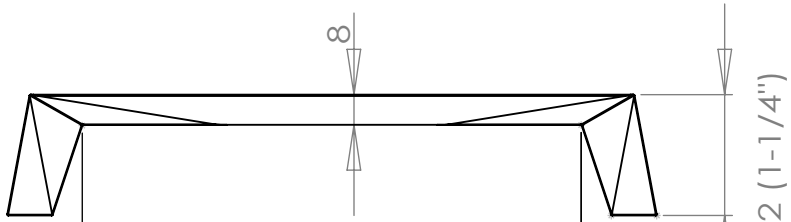

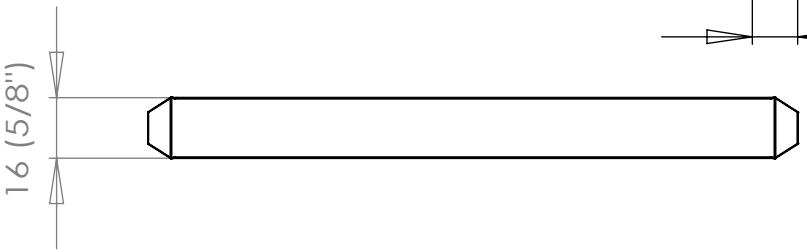

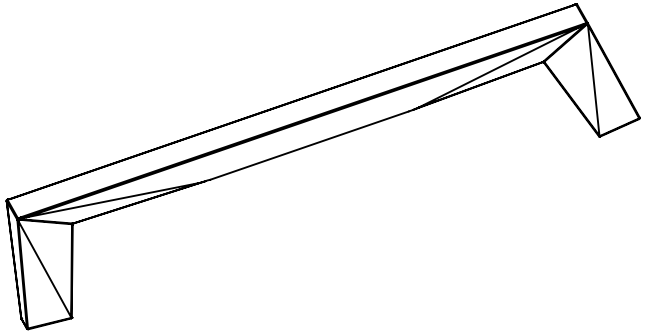

TITLE: 2315-1BPN-P

SIZE: 160mm ctc

COMMENTS: Dimensions in mm

MATERIAL:: Zinc

FINIS: Brushed Nickel

DO NOT SCALE DRAWING

5 4 3 2 1