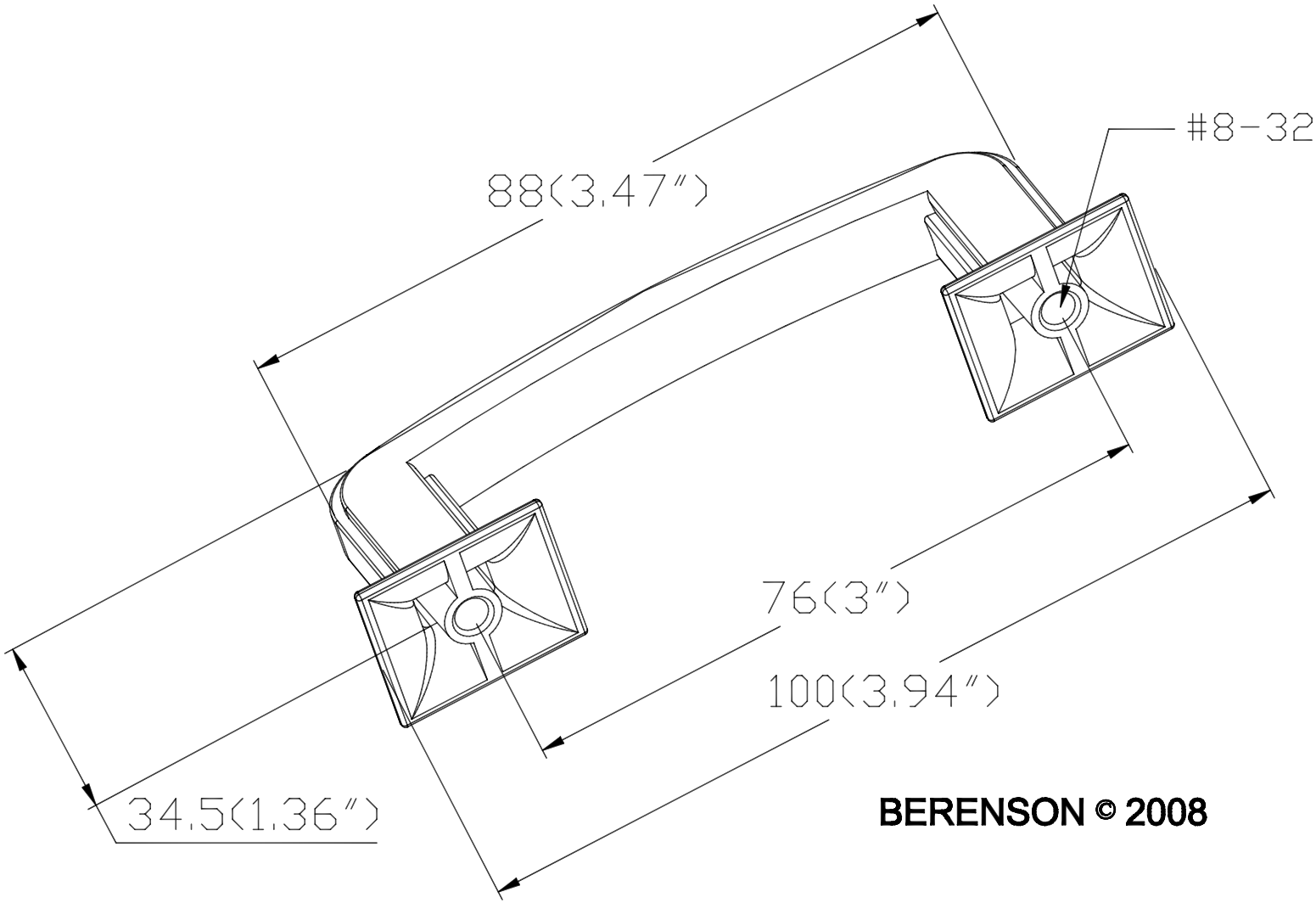

BERENSON © 2008