SINK SPECIFICATIONS

BLANCO STEELART®

BLANCO PRECISION™ 16 R10 SUPER SINGLE Under Mount

Model 515823

FEATURED MODEL

515823 PRECISION 16″ R10 SUPER SINGLE

ADDITIONAL MODELS

513686 PRECISION R10 SUPER SINGLE

516216 PRECISION 16″ R10 SUPER SINGLE BOWL W/ DRAINER

516215 PRECISION 16″ R10 MEDIUM SINGLE BOWL W/ DRAINER

FEATURES

- 18 gauge, 304 series stainless steel
- 18/10 chrome/nickel content
- Handcrafted from a single panel of stainless steel
- 10mm radius corners
- Elegant and functional drain grooves
- Long-lasting, easy-to-clean, satin polished finish
- Sound-deadening insulation
- Rear drain placement

NOMINAL DIMENSIONS

MODEL	OVERALL	BOWL DEPTH	DRAIN DIAMETER
515823	32″ x 18″	10	3-1/2

DXF cutout templates available on our web site

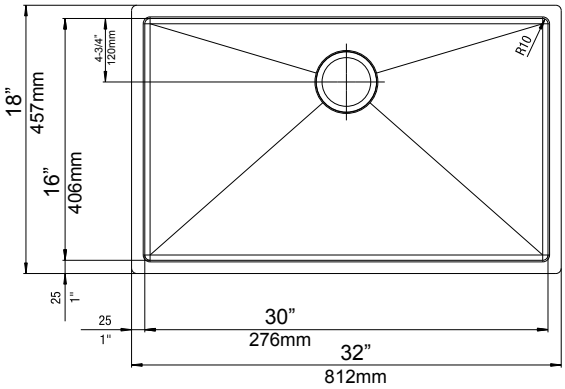

CODE/STANDARDS COMPLIANCE

ASME 112.19.3-00

IAPMO/UPC listed

OPTIONAL ACCESSORIES

Stainless Steel Sink Grid - 223192

Glass Cutting Board - 224390

Colander - 224387

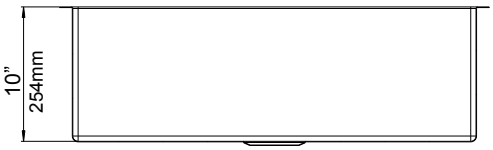

WARRANTY

BLANCO'S STEELART Series sinks feature a LIMITED LIFETIME WARRANTY to be free of all manufacturing defects under normal use. See our complete warranty for details.

While BLANCO endeavors to provide accurate information, all dimensions are nominal, cannot be guaranteed, and are subject to change or cancellation. BLANCO assumes no responsibility for use of superseded or voided specifications.

JOB INFORMATION

Job Name: _____

Contact: _____

Date Specified: _____

Specifier: _____

Contractor: _____

BLANCO AMERICA

800.451.5782

www.blancoamerica.com