CENTOCO

1700SC-106

RESIDENTIAL





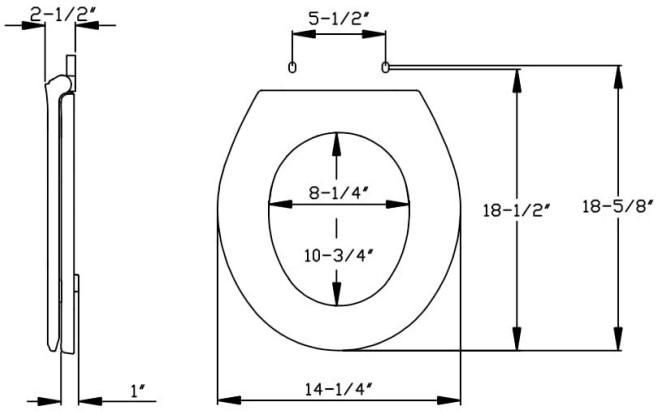

Dimensions shown are nominal and may vary within a range of tolerance. Product specifications are subject to change without notice.

Product Specifications

Shape	Elongated
Seat Material	Polypropylene
Seat Form	Closed front
Commercial Hinge	No
Bolt Material	Plastic
Hardware Material	Plastic
Check Hinge	No
Cover	Yes
Custom Gasket	No
Color	Bone

Warranty 1 year limited warranty

Available Colors

White, bone, crane white, biscuit,

Features

Safety Close

Safety Close hinge eliminates slamming, prevents child or pet injury.

Length Adjustment

Seat can be adjusted during installation for proper fit.