CENTOCO

220-001

COMMERCIAL STANDARD





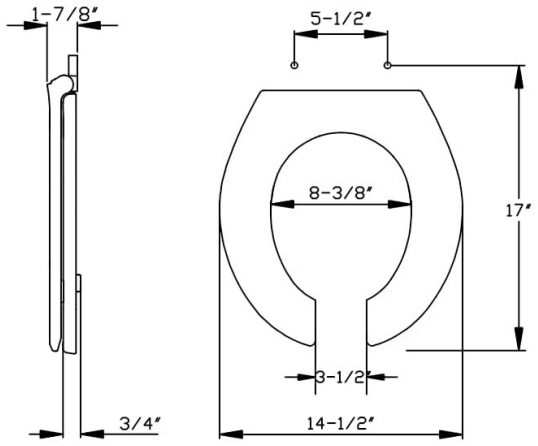

Dimensions shown are nominal and may vary within a range of tolerance. Product specifications are subject to change without notice.

Product Specifications

Shape	Round
Seat Material	Polypropylene
Seat Form	Open front
Commercial Hinge	No
Bolt Material	Plastic
Hardware Material	Plastic
Check Hinge	No
Cover	Yes
Custom Gasket	No
Color	White
Warranty	1 year limited warranty
Available Colors	White, bone, black,

Features

Length Adjustment

Seat can be adjusted during installation for proper fit.