CENTOCO

500CCSS-301

COMMERCIAL HEAVY DUTY



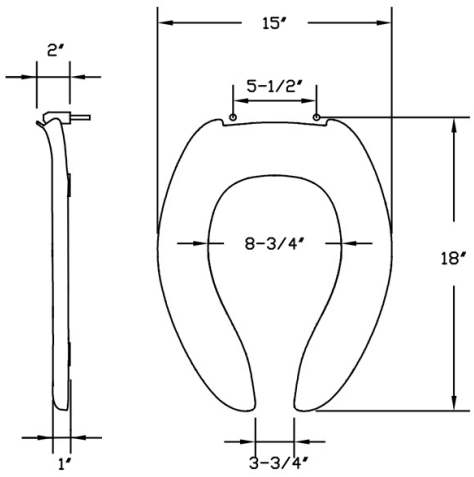

Dimensions shown are nominal and may vary within a range of tolerance. Product specifications are subject to change without notice.

Product Specifications

Shape	Elongated
Seat Material	Polypropylene
Seat Form	Open front
Commercial Hinge	Yes
Bolt Material	Zinc plated steel
Hardware Material	Plastic
Check Hinge	Yes
Cover	No
Custom Gasket	Yes
Color	Crane white
Warranty	1 year limited warranty

Available Colors

White, crane white, black,

Features

Self Sustaining

Self Sustaining hinge holds commercial seats in place and avoids slamming.

Commercial Hinge

Includes commercial grade hinges. One piece solid metal hinge pin and bolt over molded with plastic.