CENTOCO

700-106

RESIDENTIAL





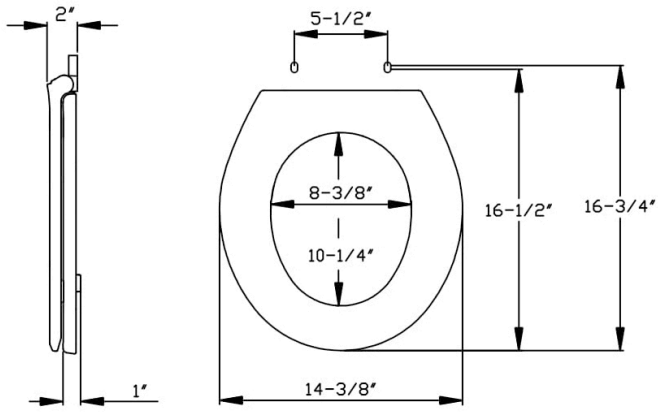

Dimensions shown are nominal and may vary within a range of tolerance. Product specifications are subject to change without notice.

Product Specifications

Shape	Round
Seat Material	Centocore wood
Seat Form	Closed front
Commercial Hinge	No
Bolt Material	Plastic
Hardware Material	Plastic
Check Hinge	No
Cover	Yes
Custom Gasket	Yes
Color	Bone

Warranty 1 year limited warranty

Available Colors

White, bone, crane white, biscuit,

Features

Length Adjustment

Seat can be adjusted during installation for proper fit.

Centocore Wood

"Centcore™ It's Wood. Only Better.™ Centocore™ patented technology offers a polypropylene shell over a composite molded wood core. Won't crack, chip, peel or fade like conventional painted wood flour seats."