CENTOCO

900BN-001

RESIDENTIAL





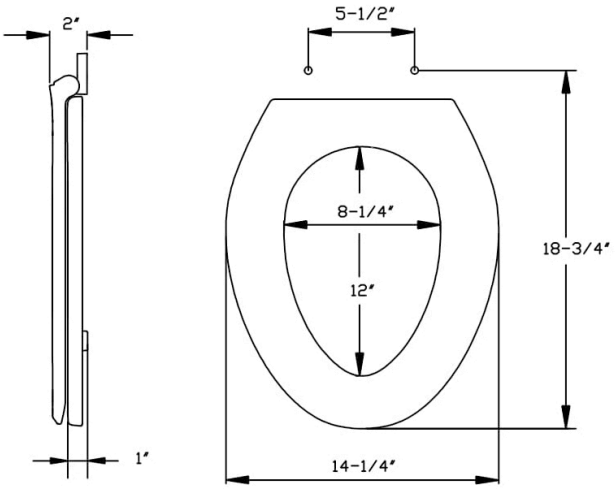

Dimensions shown are nominal and may vary within a range of tolerance. Product specifications are subject to change without notice.

Product Specifications

Shape	Elongated
Seat Material	Centocore wood
Seat Form	Closed front
Commercial Hinge	No
Bolt Material	Stainless steel
Hardware Material	Stainless Steel
Check Hinge	No
Cover	Yes
Custom Gasket	Yes
Color	White
Warranty	1 year limited warranty
Available Colors	White,

Features

Centocore Wood

"Centcore™ It's Wood. Only Better.™ Centocore™ patented technology offers a polypropylene shell over a composite molded wood core. Won't crack, chip, peel or fade like conventional painted wood flour seats."