CENTOCO

AM2300STSCC-001

COMMERCIAL HEAVY DUTY





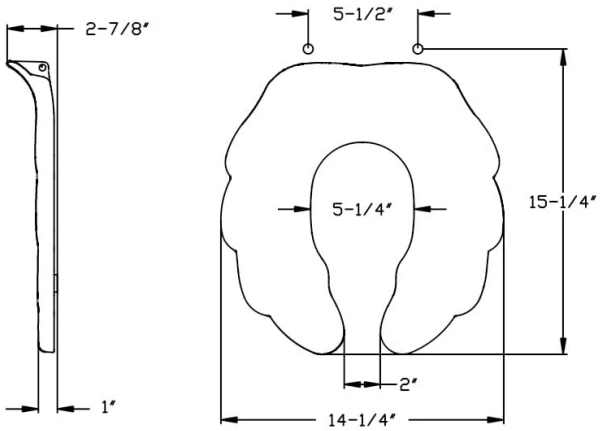

Dimensions shown are nominal and may vary within a range of tolerance. Product specifications are subject to change without notice.

Product Specifications

Shape	Other
Seat Material	Polypropylene
Seat Form	Open front
Commercial Hinge	Yes
Bolt Material	Stainless steel
Hardware Material	Stainless Steel
Check Hinge	Yes
Cover	No
Custom Gasket	Yes
Color	white
Warranty	1 year limited warranty
Available Colors	white,

Features

Antimicrobial

US: Antimicrobial additive inhibits the growth of stain and odor causing bacteria on this article. CDN: Contains CESA-MB8233 as a preservative for the protection of this article.

Commercial Hinge

Includes commercial grade hinges. One piece solid metal hinge pin and bolt over molded with plastic.