CENTOCO

HL1500STSCC-001

COMMERCIAL HEAVY DUTY

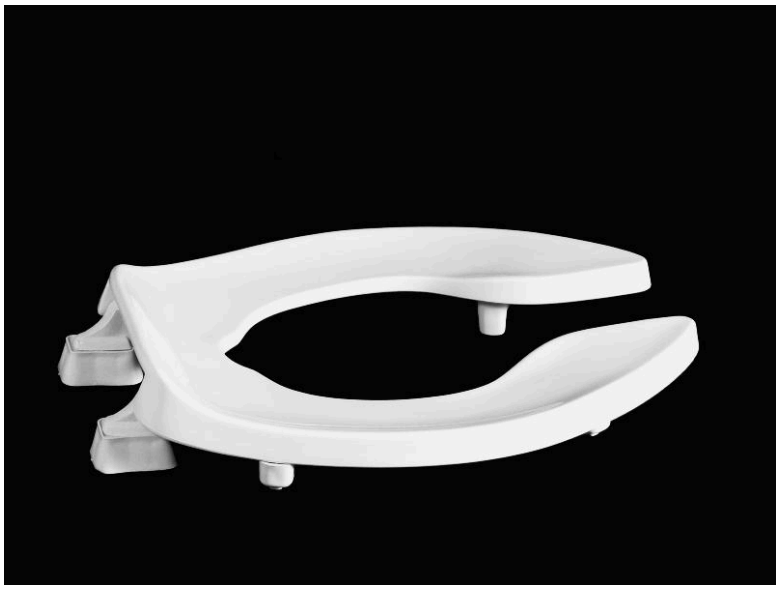

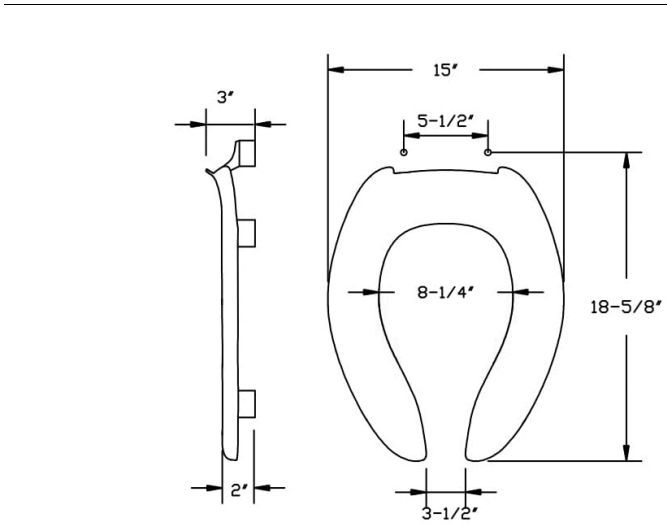

Dimensions shown are nominal and may vary within a range of tolerance. Product specifications are subject to change without notice.

Product Specifications

Shape	Elongated
Seat Material	Polypropylene
Seat Form	Open front
Commercial Hinge	Yes
Bolt Material	Stainless steel
Hardware Material	Stainless Steel
Check Hinge	Yes
Cover	No
Custom Gasket	Yes
Color	White
Warranty	1 year limited warranty
Available Colors	White,

Features

ADA Compliant Raised Seat

ADA compliant 2" medical assistance raised toilet seat.

Commercial Hinge

Includes commercial grade hinges. One piece solid metal hinge pin and bolt over molded with plastic.