CD Technical Data Sheet

BASES COLLECTION

XSB6060BF COL DE

BASES COLLECTION
Enhancing Livable Design

TECHNICAL INFORMATION

OD 61" x 61" x 4.5"
THRESHOLD 1.125"
LOAD FACTOR 0.44
HANDED BY Center Drain

TOP VIEW

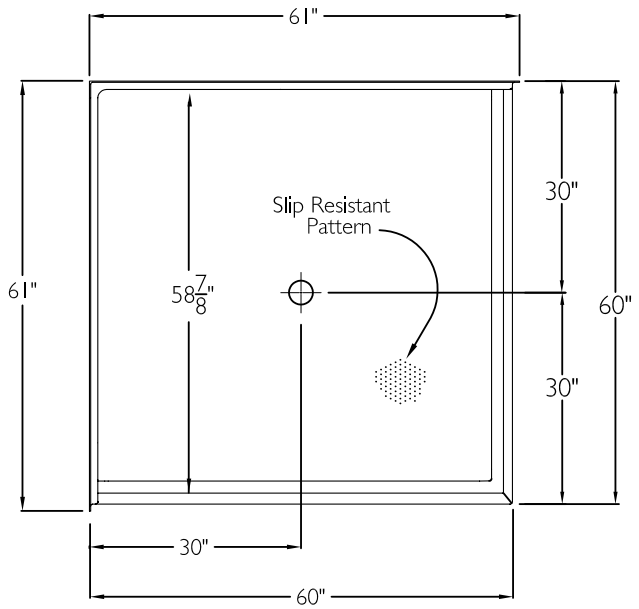

FRONT VIEW

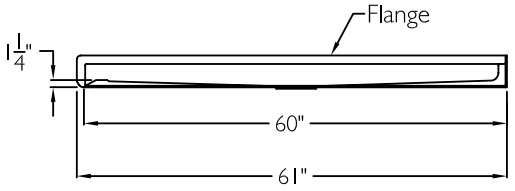

SIDE VIEW

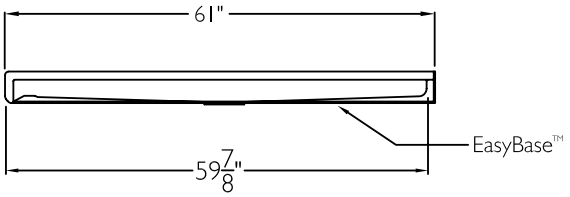

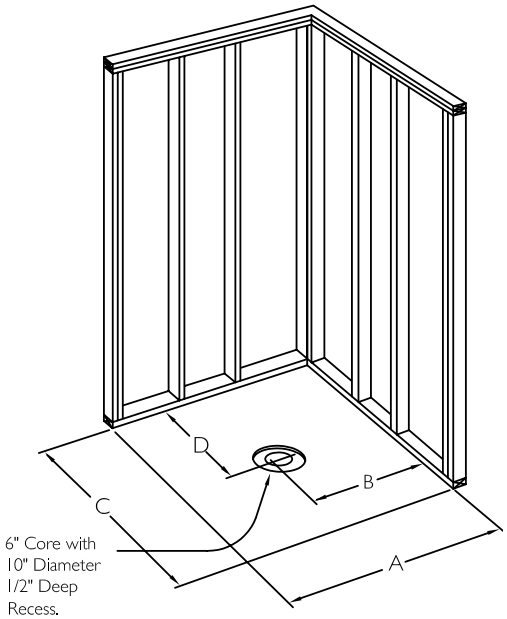

FRAMING DIMENSIONS

A 60" **B** 30"
C 60" **D** 30"

ADDITIONAL CODES

ICC/ANSI117.1, BOCA, NAHBUPC, Southern Building Code

CROSS SECTION OF THRESHOLD

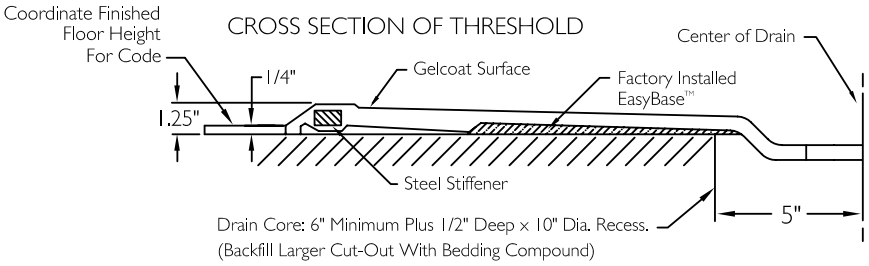

cd
comfortdesigns