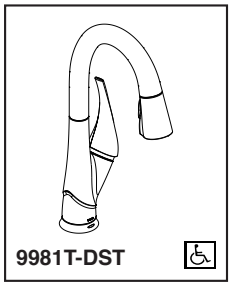

BAR/PREP FAUCETS

- Esque® Collection
- Single Handle Pull-Down

Submitted Model No.:_____

Specific Features:_____

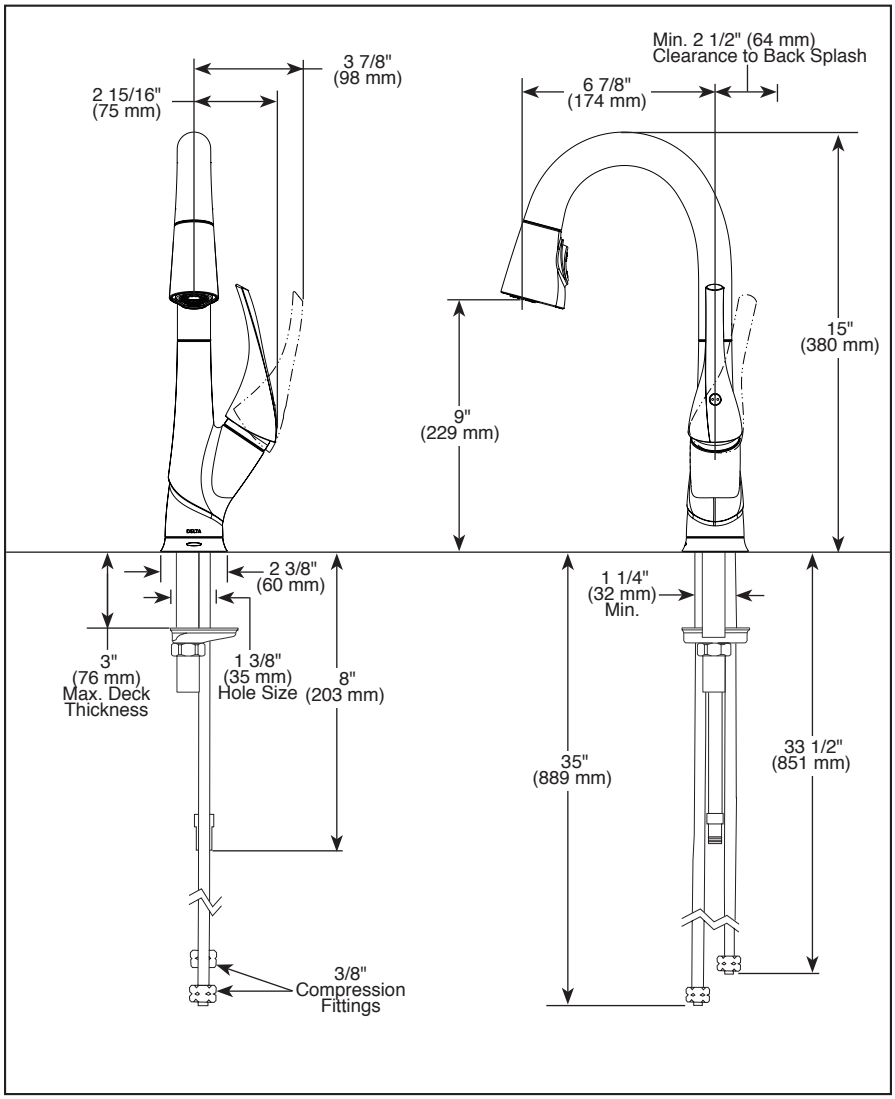

FEATURES:

- Touch$_2$O® Technology
- DIAMOND Seal® Technology
- MagnaTite® Magnetic Docking
- Touch-Clean® Sprayhead

STANDARD SPECIFICATIONS:

- 1.8 gpm @ 60 PSI, 6.8 L/Min @ 414 kPa
- One or three hole mount (escutcheon not included)
- Diamond coated ceramic cartridge
- 3/8" O.D. straight, staggered PEX supply tubes
- Spout rotates 360°
- Red/blue indicator markings
- Two function wand; aerated stream or spray
- Dual integral double check valves in sprayer
- LED indicator light signals on-off, water temperature and when batteries run low.

WARRANTY

- Lifetime limited warranty on parts (other than electronic parts and batteries) and finishes: or, for commercial users, for 5 years from date of purchase.
- 5 year limited warranty on electronic parts (other than batteries); or, for commercial users, for 1 year from the date of purchase. No warranty is provided on batteries.

COMPLIES WITH:

- ASME A112.18.1 / CSA B125.1
- ASME A112.18.6
- Indicates compliance to ICC/ANSI A117.1 - Valve control only
- Verified compliant with .25% weighted average Pb content regulations.

Delta reserves the right (1) to make changes in specifications and materials, and (2) to change or discontinue models, both without notice or obligation. Dimensions are for reference only. See current full-line price book or www.deltafaucet.com for finish options and product availability.

DSP-K-9981T-DST Rev. A

DELTA FAUCET COMPANY
55 E. 111th Street, Indianapolis, Indiana 46280
395 Matheson Blvd. E., Mississauga, ON L4Z 2H2
© 2016 Masco Corporation of Indiana