ELKAY SPECIFICATIONS

Lustertone® Classic Stainless Steel 27" x 22" x 10" Single Bowl Dual Mount Sink with Perfect Drain®

Model(s) DLSR272210PD

PRODUCT SPECIFICATIONS

Lustertone® Classic Stainless Steel 27" x 22" x 10" Single Bowl Dual Mount Sink with Perfect Drain®. Sink is manufactured from 18 gauge 304 Stainless Steel with a Lustrous Satin finish, Center drain placement, and Sides and Bottom pads.

Installation Type:	Undermount, Drop-in
Material:	304 Stainless Steel
Special Features:	Perfect Drain|Slim Rim
Finish:	Lustrous Satin
Gauge:	18
Sound Deadening:	Sides and Bottom pads
Number of Bowls:	1
Sink Dimensions:	27" x 22" x 10"
Bowl 1 Dimensions:	24" x 16" x 10"
Drain Size:	3-3/8" (86mm)
Drain Location:	Center
Minimum Cabinet Size:	30"
Mounting Hardware:	Part # 64090012 included for top mount installation for countertops up to 3/4" (19mm) thick
Template Included:	No
Cutout Template #:	1000000907

Template is available for download at elkay.com. CAD software will be required to open the template.

Cutout Dimensions for Drop-in Installation:
26-3/8" x 21-3/8" (670mm x 543mm) with 1-1/2" (38mm) corner radius

Perfect Drain: Seamlessly welded stainless steel collar eliminates the gap between a traditional drain and the sink for a more sanitary and gap free installation. Select garbage disposers can be installed on either sink bowl for user convenience. Please see our Garbage Disposer Compatibility Guide.

Hole Drilling Configurations:
1-1/2" (38mm) Diameter Faucet Holes on 4" (102mm) Centers

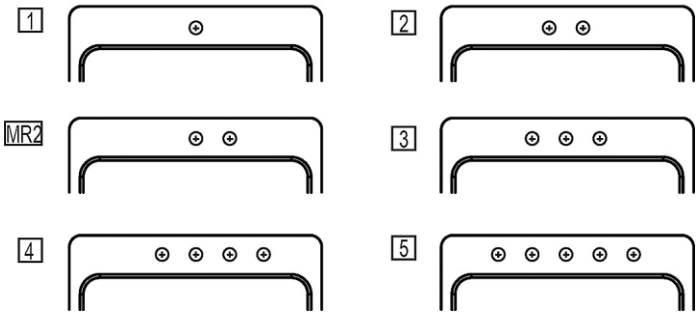

PART:_____QTY: _____
PROJECT:_____
CONTACT:_____
DATE:_____
NOTES:_____
APPROVAL:_____

Included with Product: **One LKPD1 Perfect Drain and strainer.**

A Century of Tradition and Quality.
For more than 100 years, Elkay has been making innovative products and providing exceptional customer care. We take pride in offering plumbing products that make life easier, inspire change and leave the world a better place.

Product Compliance: ASME A112.19.3/CSA B45.4
Accessory: ASME A112.18.2/CSA B125.2

Sinks are listed by IAPMO® as meeting the applicable requirements of the Uniform Plumbing Code®, International Plumbing Code®, and National Plumbing Code of Canada.

Clean and Care Manual (PDF)
Installation Instructions (PDF) - 1000005237
Installation Instructions (PDF) - 74180289_Disposer
Installation Instructions (PDF) - 74180340-USA_Drain
Installation Instructions (PDF) - Garbage_Disposer_Compatibility_Guide
Limited Lifetime Warranty (PDF)

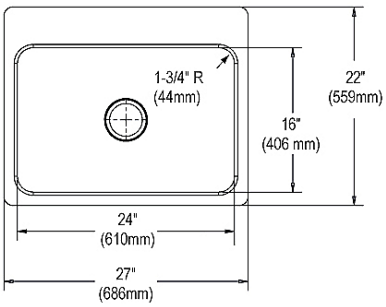

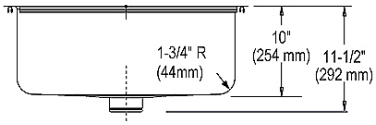

In keeping with our policy of continuing product improvement, Elkay reserves the right to change product specifications without notice. Please visit elkay.com for the most current version of Elkay product specification sheets. This specification describes an Elkay product with design, quality, and functional benefits to the user. When making a comparison of other producers' offerings, be certain these features are not overlooked. Latest version of the spec sheet available: https://www.elkayfiles.com/spec-sheets/DLSR272210PD_spec.pdf

Installation Profile:

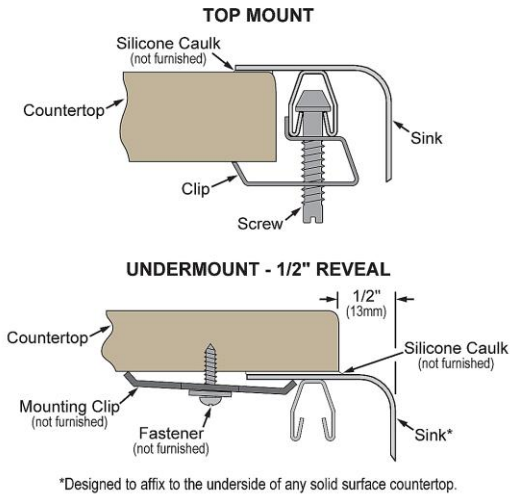

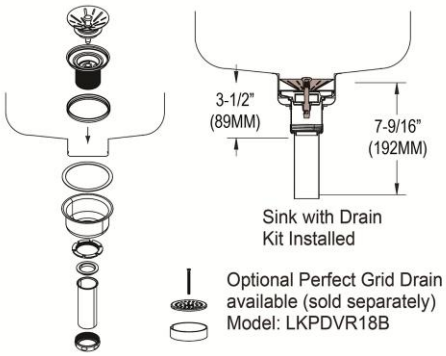

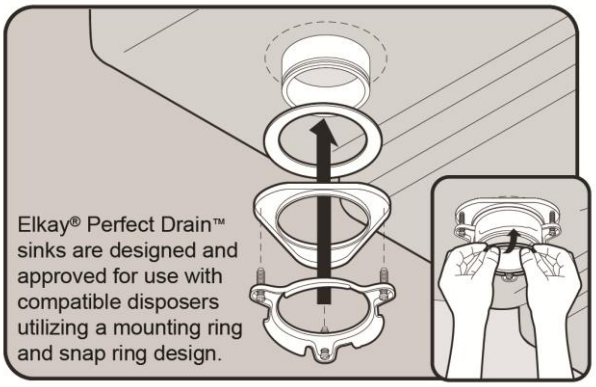

Optional Accessories		
LKWBG2416SS	Stainless Steel 23" x 15" x 1-1/8" Bottom Grid Spec Sheet (PDF)	
CB1713	Hardwood 13-1/2" x 17" x 1" Cutting Board Spec Sheet (PDF)	
CBS1316	Hardwood 14-1/2" x 17" x 3/4" Cutting Board Spec Sheet (PDF)	
LKDS35	3-1/2" Garbage Disposal Stopper / Strainer for use with Perfect Drain®-Satin Finish Spec Sheet (PDF)	

In keeping with our policy of continuing product improvement, Elkay reserves the right to change product specifications without notice. Please visit elkay.com for the most current version of Elkay product specification sheets. This specification describes an Elkay product with design, quality, and functional benefits to the user. When making a comparison of other producers' offerings, be certain these features are not overlooked. Latest version of the spec sheet available: https://www.elkayfiles.com/spec-sheets/DLSR272210PD_spec.pdf

LKDS99	3-1/2" Garbage Disposal Stopper / Strainer for use with Perfect Drain®-Chrome Polished Stainless Steel Spec Sheet (PDF)	
LKPDVR18B	Perfect Drain® Chrome Plated Brass Body Vandal-resistant Strainer Spec Sheet (PDF)	
LKWERBSS	Stainless Steel 15-3/8" x 12-3/8" x 5-7/16" Rinsing Basket Spec Sheet (PDF)	
LKSMHSL	Spec Sheet (PDF)	NO IMAGE AVAILABLE

In keeping with our policy of continuing product improvement, Elkay reserves the right to change product specifications without notice. Please visit elkay.com for the most current version of Elkay product specification sheets. This specification describes an Elkay product with design, quality, and functional benefits to the user. When making a comparison of other producers' offerings, be certain these features are not overlooked. Latest version of the spec sheet available: https://www.elkayfiles.com/spec-sheets/DLSR272210PD_spec.pdf