ELKAY SPECIFICATIONS

Crosstown® 18 Gauge Workstation Stainless Steel 31-1/2" x 18-1/2" x 9" Equal Double Bowl Undermount Sink & Faucet Kit with Aqua Divide

Model(s) ECTRUA31169TFCW

PRODUCT SPECIFICATIONS

Crosstown® 18 Gauge Workstation Stainless Steel 31-1/2" x 18-1/2" x 9" Equal Double Bowl Undermount Sink & Faucet Kit with Aqua Divide. Sink is handmade/fabricated from 18 gauge 304 Stainless Steel with a Polished Satin finish, Rear Center drain placement, and Full spray sides and bottom with Sides and Bottom pads.

Installation Type:	Undermount
Material:	304 Stainless Steel
Special Features:	Workstation
Finish:	Polished Satin
Gauge:	18
Sound Deadening:	Full spray sides and bottom with Sides and Bottom pads
Number of Bowls:	2
Sink Dimensions:	31-1/2" x 18-1/2" x 9"
Bowl 1 Dimensions:	14-5/16" x 16" x 9"
Bowl 2 Dimensions:	14-5/16" x 16" x 9"
Drain Size:	3-1/2" (89mm)
Drain Location:	Rear Center
Minimum Cabinet Size:	36"
Mounting Hardware:	Included
Template Included:	Yes
Cutout Template #:	1000005511

Template is available for download at elkay.com. CAD software will be required to open the template.

Installation Profile:

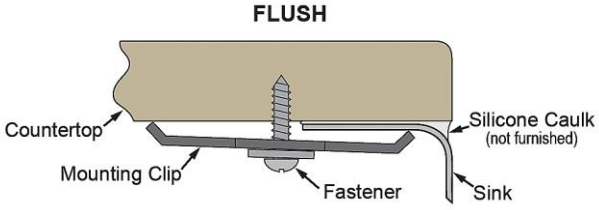

Designed to affix to the underside of any solid surface countertop.

Included with Product: **2x Bottom grid CTXBG1314, 2x drain LKDD, colander LKC0717SS, drying rack LKDR1317RU and LKDR0717SS, cutting board LKCB1217AC and faucet LKAV2061CR**

A Century of Tradition and Quality.
For more than 100 years, Elkay has been making innovative products and providing exceptional customer care. We take pride in offering plumbing products that make life easier, inspire change and leave the world a better place.

KBB READERS' CHOICE AWARDS 2025 WINNER

Product Compliance:	ASME A112.19.3/CSA B45.4
Faucet:	ASME A112.18.1/CSA B125.1
	NSF 61
	NSF 372 (lead free)
Accessory:	ASME A112.18.2/CSA B125.2

Sinks are listed by IAPMO® as meeting the applicable requirements of the Uniform Plumbing Code®, International Plumbing Code®, and National Plumbing Code of Canada.

Clean and Care Manual (PDF)
Clean and Care Manual (PDF)
Installation Instructions (PDF) - 1000005239
Installation Instructions (PDF) - 1000005235
Warranty (PDF)

PART:_____QTY: _____

PROJECT:_____

CONTACT:_____

DATE:_____

NOTES:_____

APPROVAL:_____

In keeping with our policy of continuing product improvement, Elkay reserves the right to change product specifications without notice. Please visit elkay.com for the most current version of Elkay product specification sheets. This specification describes an Elkay product with design, quality, and functional benefits to the user. When making a comparison of other producers' offerings, be certain these features are not overlooked.

Included Accessories

LKAV2061CR	Avado® Single Hole Kitchen Faucet with Semi-professional Spout and Lever Handle Chrome Spec Sheet (PDF)	
CTXBG1314	Crosstown® Stainless Steel 12-3/4" x 14-1/4" x 1-1/4" Bottom Grid Spec Sheet (PDF)	
LKC0717SS	Crosstown® Stainless Steel 16-7/8" x 6-3/4" x 3-1/8" Colander with Wood Handles Spec Sheet (PDF)	
LKCB1217AC	Acacia Hardwood 12" x 16-7/8" x 1" Cutting Board Spec Sheet (PDF)	
LKDD	3-1/2" Drain Fitting Deep Strainer Basket Spec Sheet (PDF)	

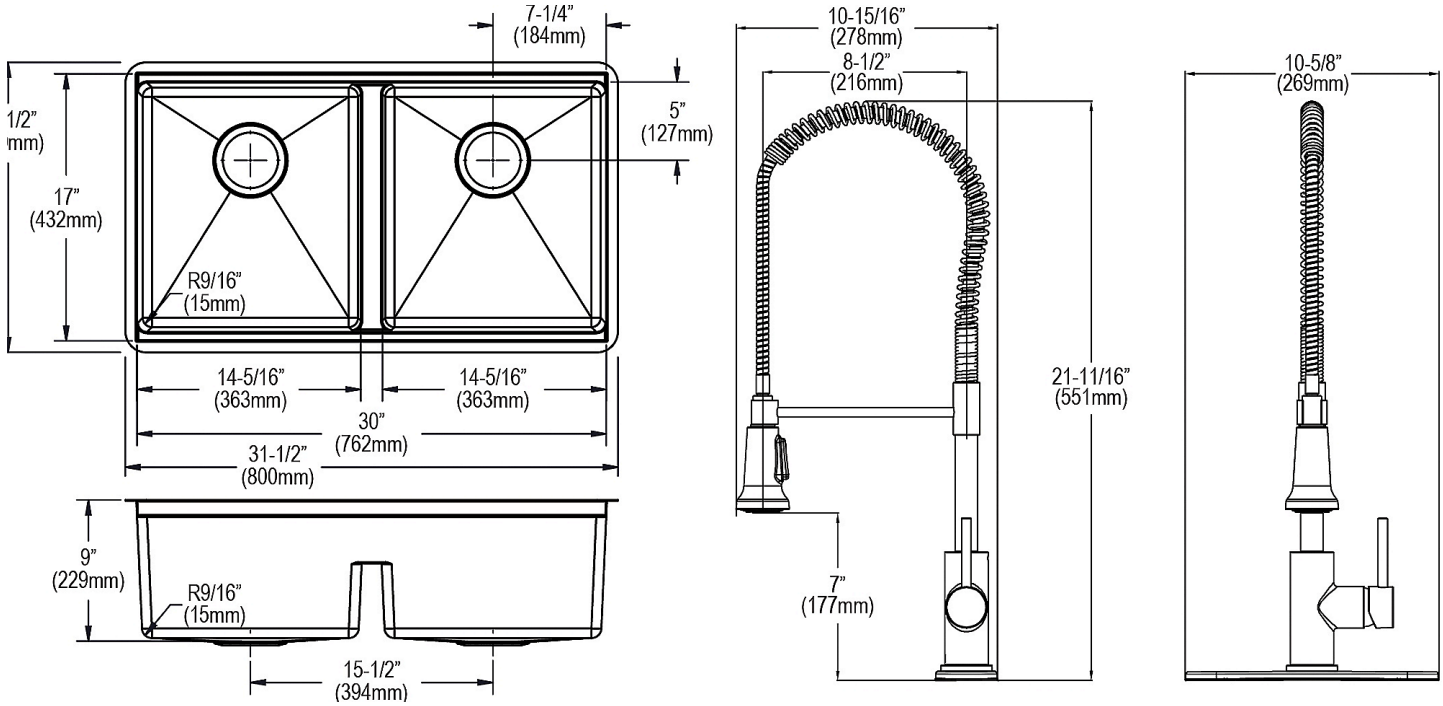

Optional Accessories

In keeping with our policy of continuing product improvement, Elkay reserves the right to change product specifications without notice. Please visit elkay.com for the most current version of Elkay product specification sheets. This specification describes an Elkay product with design, quality, and functional benefits to the user. When making a comparison of other producers' offerings, be certain these features are not overlooked.

CTXBG1314	Crosstown® Stainless Steel 12-3/4" x 14-1/4" x 1-1/4" Bottom Grid Spec Sheet (PDF)	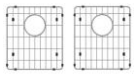
LKC0717SS	Crosstown® Stainless Steel 16-7/8" x 6-3/4" x 3-1/8" Colander with Wood Handles Spec Sheet (PDF)	
LKCB1217AC	Acacia Hardwood 12" x 16-7/8" x 1" Cutting Board Spec Sheet (PDF)	
LKDD	3-1/2" Drain Fitting Deep Strainer Basket Spec Sheet (PDF)	
LKAV2061	Avado® Single Hole Kitchen Faucet with Semi-professional Spout and Lever Handle Spec Sheet (PDF)	
LKDR1317RU	Crosstown Black Silicone 11-7/8" x 16-3/4" x 3/8" Drying Rack Spec Sheet (PDF)	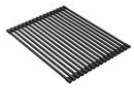
LKDR0717SS	Crosstown Stainless Steel 16-7/8" x 6-3/4" x 4-1/4" Drying Rack with Wood Handles Spec Sheet (PDF)	

In keeping with our policy of continuing product improvement, Elkay reserves the right to change product specifications without notice. Please visit elkay.com for the most current version of Elkay product specification sheets. This specification describes an Elkay product with design, quality, and functional benefits to the user. When making a comparison of other producers' offerings, be certain these features are not overlooked.

© 2026