ELKAY SPECIFICATIONS

Lustertone® Classic Stainless Steel 17" x 20" x 7-5/8" 3-Hole Single Bowl Drop-in Bathroom Sink + Faucet Kit

Model(s) LH1720C

PRODUCT SPECIFICATIONS

Lustertone® Classic Stainless Steel 17" x 20" x 7-5/8" 3-Hole Single Bowl Drop-in Bathroom Sink + Faucet Kit. Sink is manufactured from 18 gauge 304 Stainless Steel with a Lustrous Satin finish, Center drain placement, and Bottom only pads.

Installation Type:	Drop-in, Sink Kits
Material:	304 Stainless Steel
Finish:	Lustrous Satin
Gauge:	18
Sound Deadening:	Bottom only pads
Number of Bowls:	1
Sink Dimensions:	17" x 20" x 7-5/8"
Bowl 1 Dimensions:	14" x 14" x 7-1/2"
Drain Size:	3-1/2" (89mm)
Drain Location:	Center
Minimum Cabinet Size:	21"
Mounting Hardware:	Part # 64090012 included for countertops up to 3/4" (19mm) thick
Template Included:	No
Cutout Template #:	1000001272

Template is available for download at elkay.com. CAD software will be required to open the template.

Cutout Dimensions for Drop-in Installation:
16-3/8" x 19-3/8" (416mm x 492mm) with 1-1/2" (38mm) corner radius

Installation Profile:

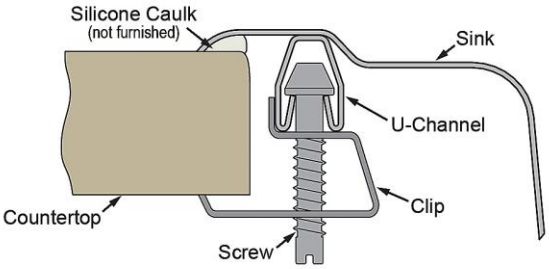

Included with Product:

LKD2432C faucet

A Century of Tradition and Quality.
For more than 100 years, Elkay has been making innovative products and providing exceptional customer care. We take pride in offering plumbing products that make life easier, inspire change and leave the world a better place.

Product Compliance:

Faucet: ASME A112.19.3/CSA B45.4
ASME A112.18.1/CSA B125.1
CEC
NSF 372 (lead free)
NSF 61

Sinks are listed by IAPMO® as meeting the applicable requirements of the Uniform Plumbing Code®, International Plumbing Code®, and National Plumbing Code of Canada.

Clean and Care Manual (PDF)
Installation Instructions (PDF) - 1000005236
Installation Instructions (PDF) - 0000000998
Warranty (PDF)

PART:_____QTY: _____
PROJECT:_____
CONTACT:_____
DATE:_____
NOTES:_____
APPROVAL:_____

In keeping with our policy of continuing product improvement, Elkay reserves the right to change product specifications without notice. Please visit elkay.com for the most current version of Elkay product specification sheets. This specification describes an Elkay product with design, quality, and functional benefits to the user. When making a comparison of other producers' offerings, be certain these features are not overlooked.

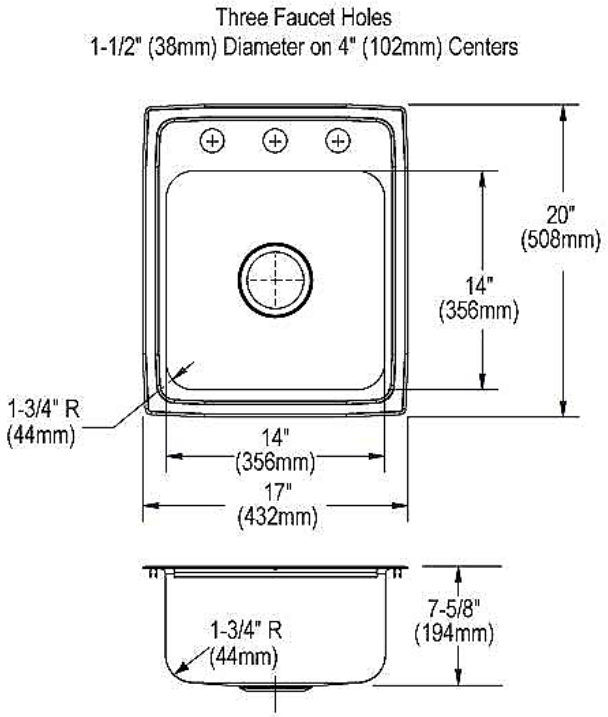

Optional Accessories		
LKWBG1414SS	Stainless Steel 13" x 13" x 1" Bottom Grid Spec Sheet (PDF)	
CB1613	Hardwood 16-3/4" x 13-1/2" x 1" Cutting Board Spec Sheet (PDF)	
LK99	Deluxe 3-1/2" Drain Type 304 Stainless Steel Body Strainer Basket Rubber Seal and Tailpiece Spec Sheet (PDF)	

In keeping with our policy of continuing product improvement, Elkay reserves the right to change product specifications without notice. Please visit elkay.com for the most current version of Elkay product specification sheets. This specification describes an Elkay product with design, quality, and functional benefits to the user. When making a comparison of other producers' offerings, be certain these features are not overlooked.