PRODUCT SPECIFICATIONS

3-1/2" Drain Nickel Plated Brass Body Strainer and Tailpiece. Overall dimensions are 4-5/8" x 4-5/8" x 6-5/8". Made of Nickel-plated Brass.

Material:	Nickel-plated Brass
Finish:	Polished Nickel (PN)
Dimensions:	4-5/8" x 4-5/8" x 6-5/8"
Shipping Weight:	1 lbs.

- 1-1/2" O.D. x 4" tailpiece

A Century of Tradition and Quality.
For more than 100 years, Elkay has been making innovative products and providing exceptional customer care. We take pride in offering plumbing products that make life easier, inspire change and leave the world a better place.

Product Compliance: ASME A112.18.2/CSA B125.2

Clean and Care Manual (PDF)
Installation Instructions (PDF) - 1000005235
Warranty (PDF)

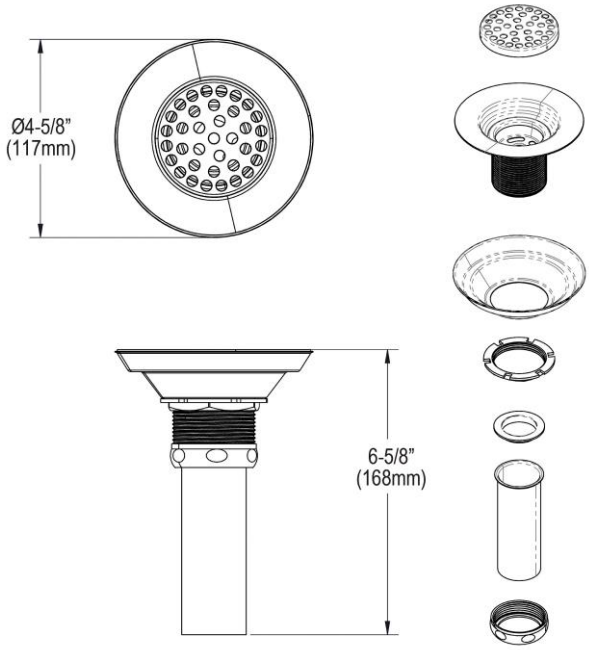

PART:_____QTY: _____

PROJECT:_____

CONTACT:_____

DATE:_____

NOTES:_____

APPROVAL:

In keeping with our policy of continuing product improvement, Elkay reserves the right to change product specifications without notice. Please visit elkay.com for the most current version of Elkay product specification sheets. This specification describes an Elkay product with design, quality, and functional benefits to the user. When making a comparison of other producers' offerings, be certain these features are not overlooked.

© 2025