3-1/2" Garbage Disposal Stopper / Strainer for use with Perfect Drain®-Satin Finish

Model(s) LKDS35

PRODUCT SPECIFICATIONS

3-1/2" Garbage Disposal Stopper / Strainer for use with Perfect Drain®-Satin Finish. Overall dimensions are 3-1/4" x 3-1/4" x 2-1/8". Made of Stainless Steel.

Material:	Stainless Steel
Finish:	Polished Stainless Steel (S)
Dimensions:	3-1/4" x 3-1/4" x 2-1/8"
Shipping Weight:	.5 lbs.

- STAINLESS STEEL CONSTRUCTION: Made of strong, Type 304 stainless steel for long-lasting durability that resists corrosion and rust

A Century of Tradition and Quality.
For more than 100 years, Elkay has been making innovative products and providing exceptional customer care. We take pride in offering plumbing products that make life easier, inspire change and leave the world a better place.

Clean and Care Manual (PDF)
Installation Instructions (PDF) - 0000000554
Installation Instructions (PDF) - Garbage_Disposer_Compatibility_Guide

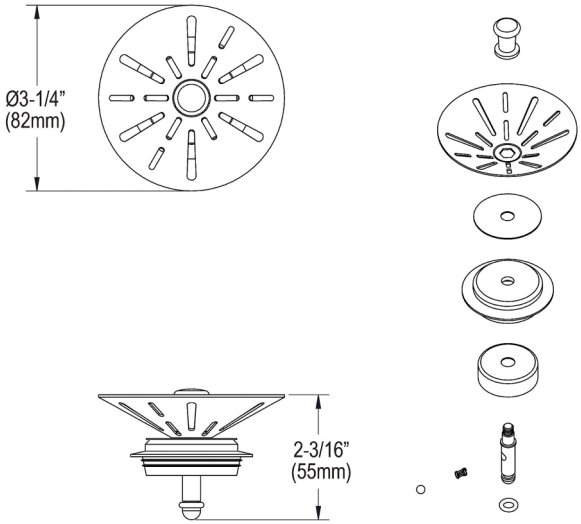

PART:_____QTY: _____

PROJECT:_____

CONTACT:_____

DATE:_____

NOTES:_____

APPROVAL:

In keeping with our policy of continuing product improvement, Elkay reserves the right to change product specifications without notice. Please visit elkay.com for the most current version of Elkay product specification sheets. This specification describes an Elkay product with design, quality, and functional benefits to the user. When making a comparison of other producers' offerings, be certain these features are not overlooked.