Absinthe FFS5280 Satin Nickel

Oriented on current trends in product design, the combination of transitional style and sculptured form provide sleek aesthetics that will delight any chef day after day.

Product Picture

Technical Drawing

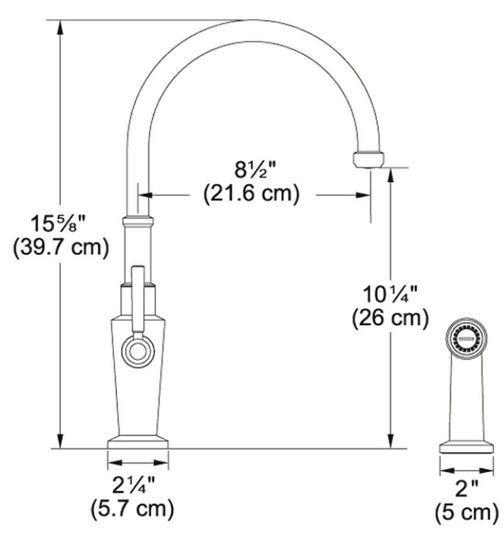

Product Information

Version	Arc Spout / Side Spray
Spray Type	Full and Needle Spray
Faucet Operation	2 Handle Mixer
Flow Rate	1.75 gpm
Cartridge	12mm Ceramic Cartridge
Where to buy	Showroom

Article Numbers

FUN#	115.0481.411
US Part Number	FFS5280