Complete Shower Set G-7165

Trim and Valve Kit Only G-7055 & G-7065

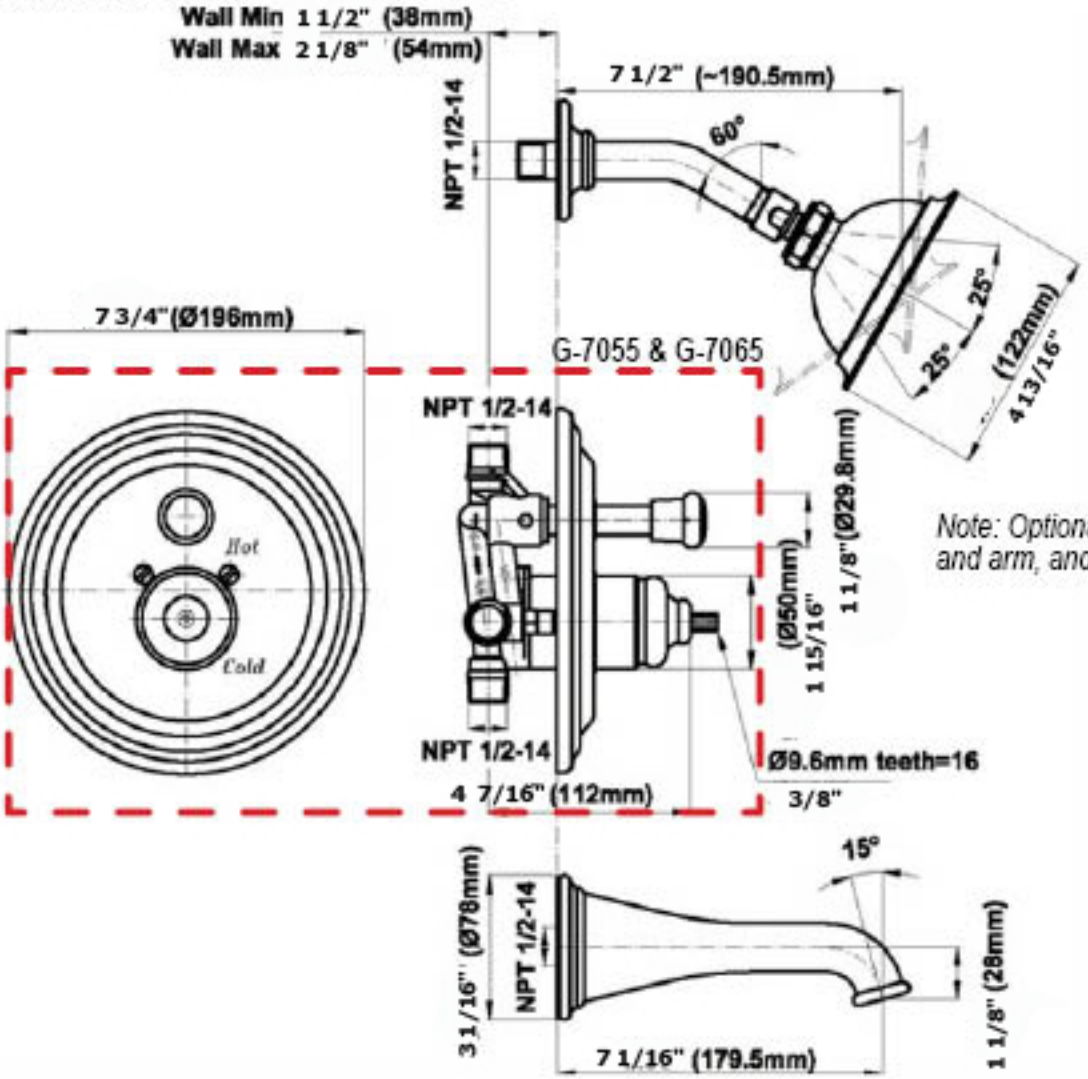

Note: Optional Shower head and arm, and tub spout shown.

Trim Only G-7065-XX

Includes one of the following handles:

Model	Series
S1	Eleganté, Chanteaux
S2	Eleganté, Chanteaux
LM2	Eleganté, Atlantis
LM10S	Pesaro
LM15S	Nantucket, Chantaeux
LM20S	Bali
LM22S	Lauren
C2S	Atlantis
C3S	Pesaro