SOMERSET
Four-hole bath combination
MODEL # 25077

Pure Freude an Wasser

GROHE

GROHE America, Inc | 200 North Gary Avenue, Suite G, Roselle, IL 60172
Phone: +1 (800) 444-7643 | Fax: +1 (800) 225-2778 | us-customerservice@grohe.com

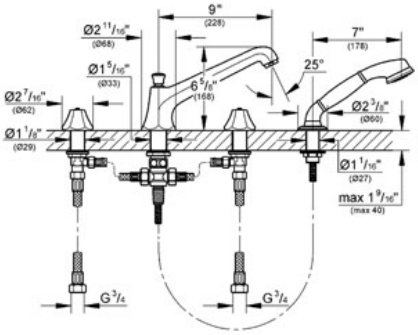

UPC C ®

Product Description:
Four-hole bath combination

Standard Specification:
- **GROHE StarLight®** finish
- Side valves with 1/2" ceramic cartridges
- Diverter bath spout with flow control
- Handshower
- Pressure resistant flexible connection hoses (between spout and side valves)
- Handles sold separately
- Lever Handles 18 172 000 & 18 172 EN0 (sold separately)
- Max Flow Rate 13.2 gpm (50 L/min)

Applicable Codes & Standards:
- Energy Policy Act of 1992
- ASME A112.18.1/CSA B125.1
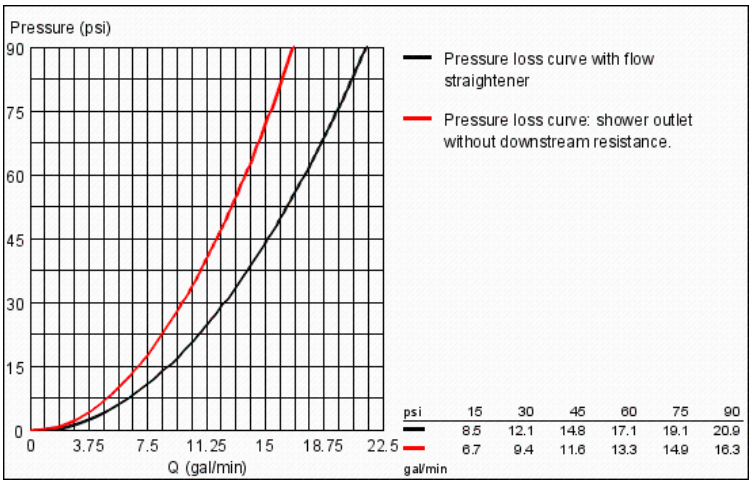
Color:
- ❑ 25077 000 chrome
- ❑ 25077 EN0 Brushed Nickel