SEABURY
Four-hole bath combination 1/2"
MODEL # 25502

Pure Freude an Wasser

GROHE

GROHE America, Inc | 200 North Gary Avenue, Suite G, Roselle, IL 60172
Phone: +1 (800) 444-7643 | Fax: +1 (800) 225-2778 | us-customerservice@grohe.com

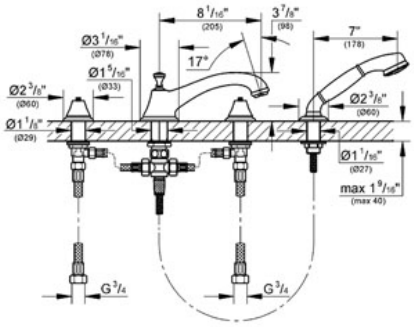

Product Description:
Four-hole bath combination 1/2"

Standard Specification:
- **GROHE StarLight®** finish
- Handles sold separately
- 10" bath tub spout
- 1/2" valves
- Seabury hand shower
- Pressure resistant flexible connection hoses (between spout and side valves)
- For Seabury cross and lever handles (18 731 / 18 732)
- Max Flow Rate 2.5 gpm at 80 psi (9.5 L/min), 13 gpm at 45 psi (49.2 L/min) for Tub Filler

Applicable Codes & Standards:
- Energy Policy Act of 1992
- ASME A112.18.1/CSA B125.1
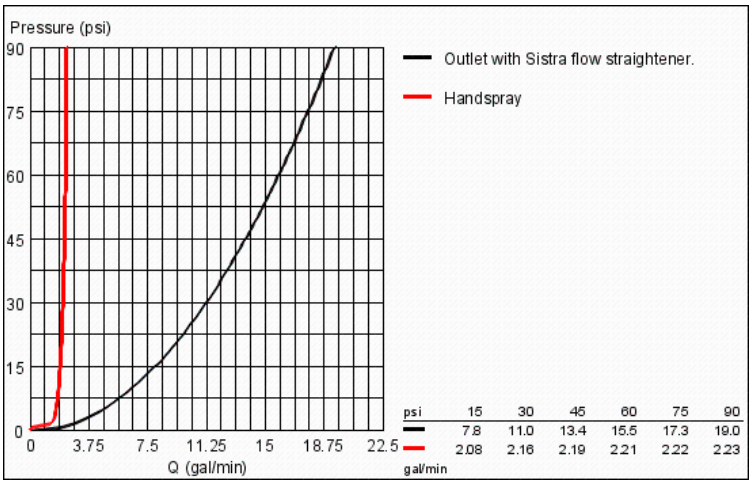
Color:
❑ 25502 000 chrome
❑ 25502 BE0 Sterling inf
❑ 25502 EN0 Brushed Nickel
❑ 25502 ZB0 Oil Rubbed Bronze