GROHFLEX SHOWER SET

MODEL # 35051

Pure Freude an Wasser

GROHE America, Inc | 200 North Gary Avenue, Suite G, Roselle, IL 60172
Phone: +1 (800) 444-7643 | Fax: +1 (800) 225-2778 | us-customerservice@grohe.com

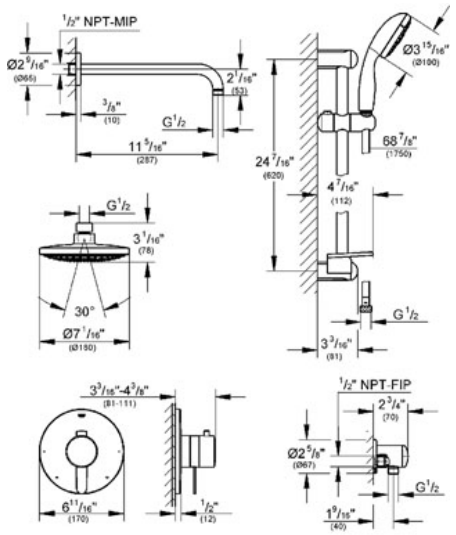

Product Description:

Standard Specification:
Cosmopolitan PBV
- Shower combination
- Consisting of:
- Euphoria® Cosmopolitan shower head 7 1/16" (27 492)
- Rainshower™ 12" shower arm (28 577)
- GrohFlex® shower/hand shower PBV trim & valve (19 881)
- New Tempesta® IV shower set (28 436)
- Relexa® wall union (28 672 000 / 28 627 EN0)

Requires GrohFlex® Universal Rough-In Box (35 026)

Applicable Codes & Standards:
- Energy Policy Act of 1992
- ASME A112.18.1/CSA B125.1

Color:
❑ 35051 000 chrome