hansgrohe

Metropol Classic
3-Hole Roman Tub Set Trim with Cross Handles
Finishes : **brushed nickel** Part no. : **31430821**

Description

Features

- 90° ceramic valves

Item details

List Price	$ 879.00

Compliance

Product image
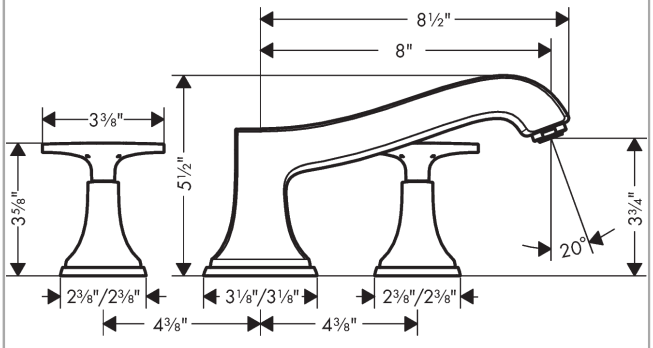
Scale drawing