Brand	hansgrohe
Art. Name	**Metropol** 3-Hole Roman Tub Set Trim with Lever Handle and 1.75 GPM Handshower
Art. Nr.	32556251
Surface	Brushed Gold Optic
Pos.	1

Product Picture

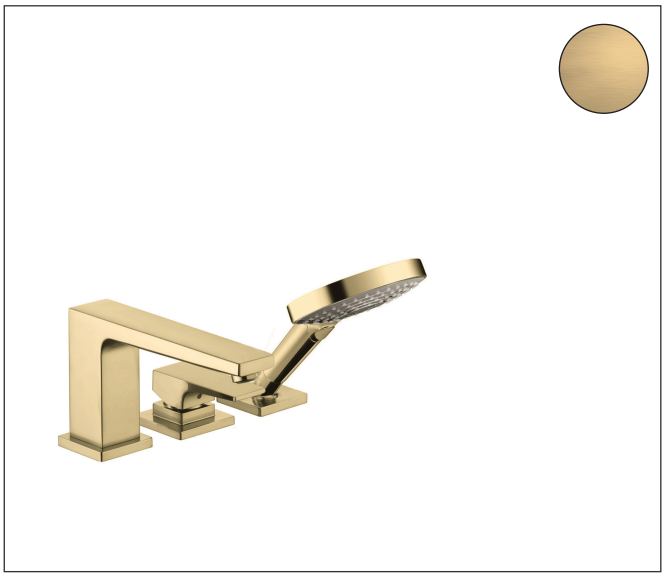

Drawing

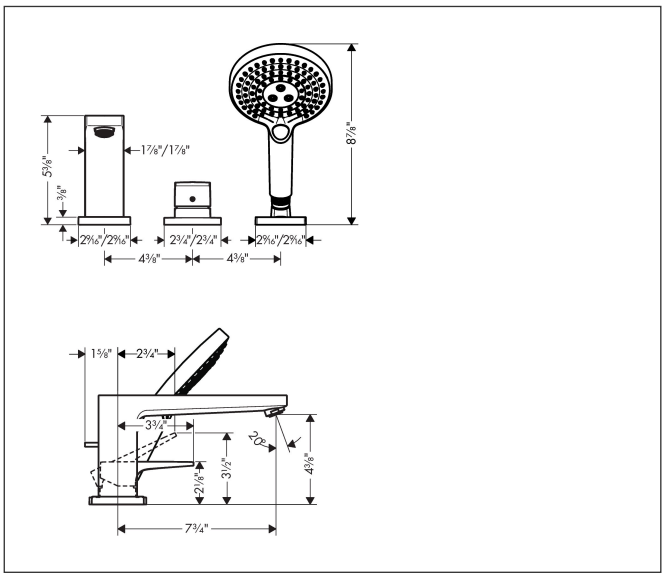

Features

- Spray type handshower: Rain, RainAir, Whirl
- Maximum flow rate: 5.8 GPM
- Flow rate of handshower: 1.75 GPM
- ceramic cartridge
- integrated backflow prevention

Technology

Spray Types