Brand	hansgrohe
Art. Name	**Tecturis S** Single-Hole Faucet 110 with Pop-Up Drain, 1.2 GPM
Art. Nr.	73314341
Surface	Brushed Black Chrome
Pos.	1

Product Picture

Drawing

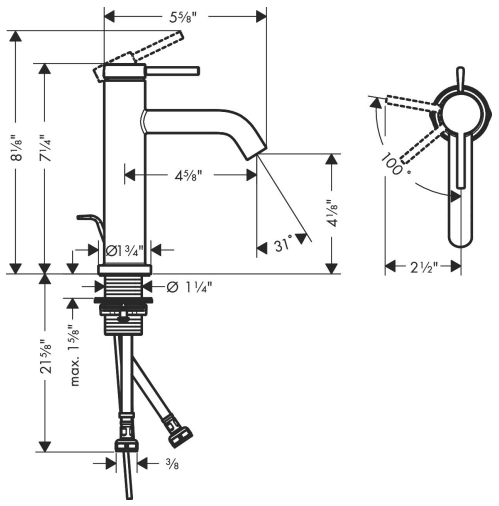

Features

- Consists of: Single-Hole Faucet
- handle design: lever handle
- Spray pattern: Aerated spray
- Maximum flow rate: 1.2 GPM
- ceramic cartridge

Technology

Comfort Zone | Eco Smart+ | AirPower | CoolStart

Certicates/approvals

ADA | WaterSense Meets EPA Criteria Certified by IAPMO R&T | UPC C ®