Brand	hansgrohe
Art. Name	**Tecturis S** Widespread Faucet 150, 1.2 GPM with Push Open Drain
Art. Nr.	73332341
Surface	Brushed Black Chrome
Pos.	1

Product Picture

Drawing

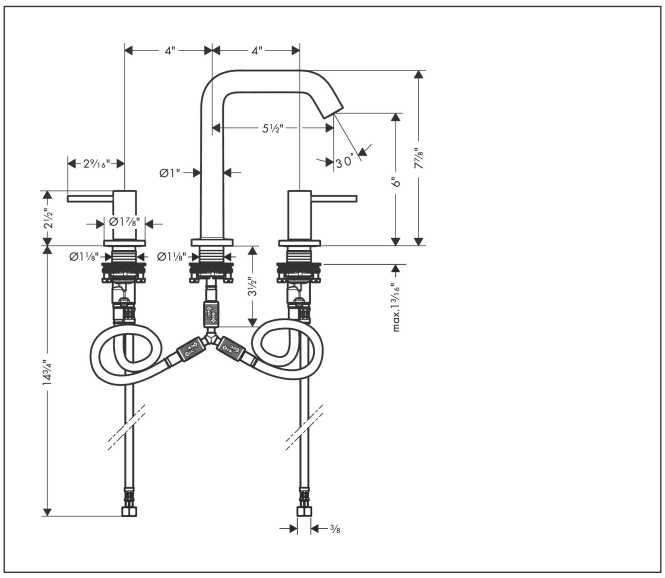

Features

- Consists of: Widespread Faucet
- handle design: lever handle
- Spray pattern: Aerated spray
- Maximum flow rate: 1.2 GPM
- ceramic valves 90°
- push-open drain kit 1¼"

Technology

Comfort Zone

Eco Smart+

AirPower

Certicates/approvals

ADA

WaterSense Meets EPA Criteria Certified by IAPMO R&T

UPC C ®