## Axor Montreux

Bath towel holder, roll holder / Porte-serviette, Dèrouleur papier WC / Toallero, Portarrollo

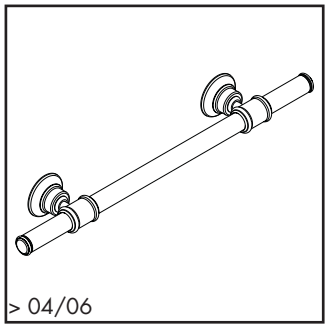


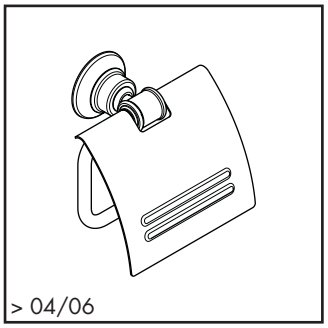


42030XX0 / 42060XX0 / 42080XX0

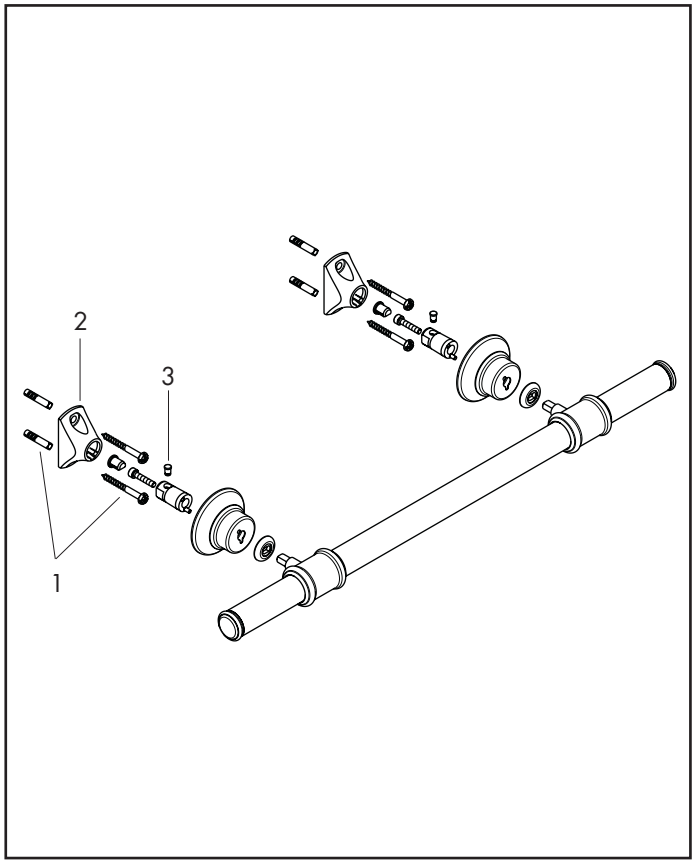


42036XX0

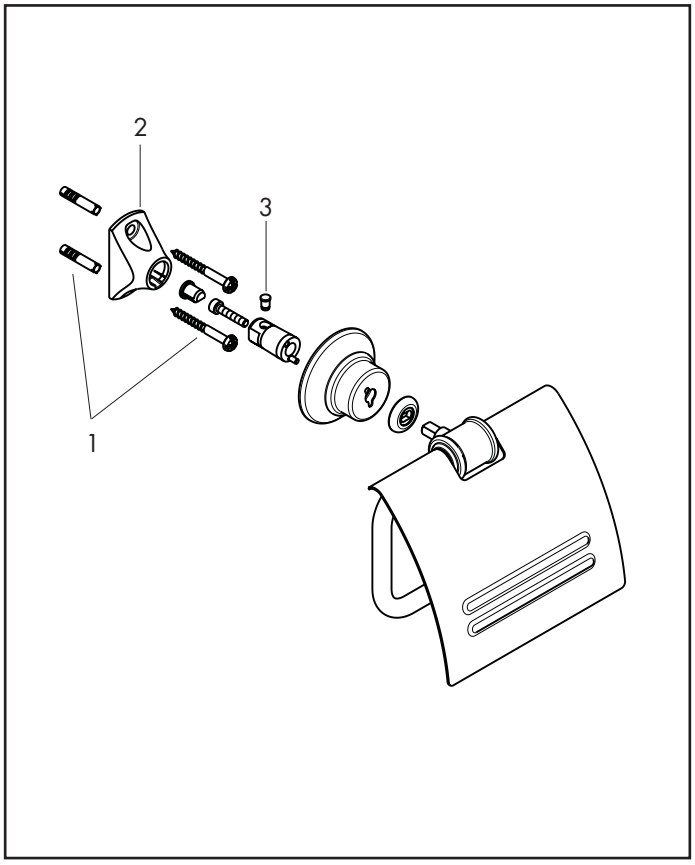


| Pos. | Description | Description | Denominación | Nr./Nr./N° | |
|---|---|---|---|---|---|
| 1 | mounting set | set de fixation | Set de fijación | 40915000 | |
| 2 | support element | support | Soporte | 96341000 | |
| 3 | pin | goupille | Varilla | 97546000 | |

XX = Please see page 1.1 for finish
XX = Description des codes couleur page 1.1
XX = Para el código de acabados ver página 1.1

AXOR® hansgrohe