Axor Massaud Vessel Lavatory, Large
42300000
Available in White

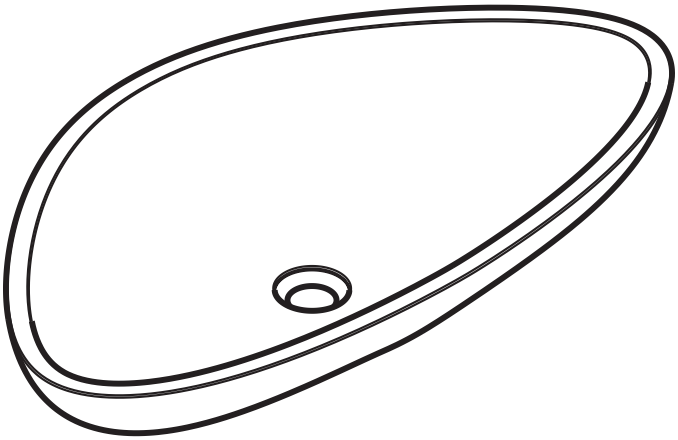

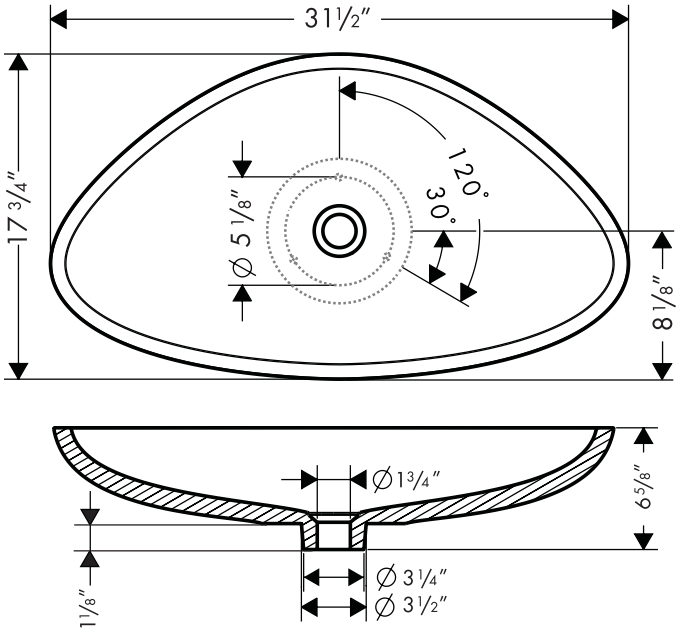

Product Specification

Made of Mineralguss
Max. thickness of mounting surface 1 3/8″

hansgrohe