# Axor Montreux Lavatory Faucet, Bridge Model

16511XX1

ECO
RIGHT

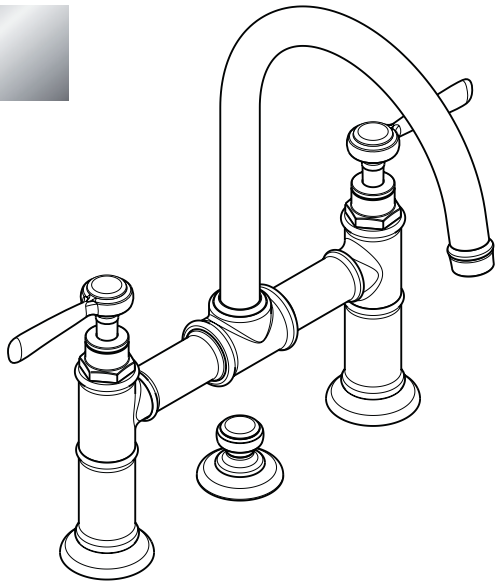

## Product Features

- Traditional lever handles with 90° ceramic cartridges
- Three hole installation
- Solid brass
- Spout swivels 150°
- Includes pop-up drain
- 1.5 gpm max.

## Available Finishes

| | |
|---|---|
| Chrome | 16511001 |
| Brushed Nickel | 16511821 |
| Polished Nickel | 16511831 |

## Optional Accessories

| | |
|---|---|
| Cap kit set | 16911XX0 |

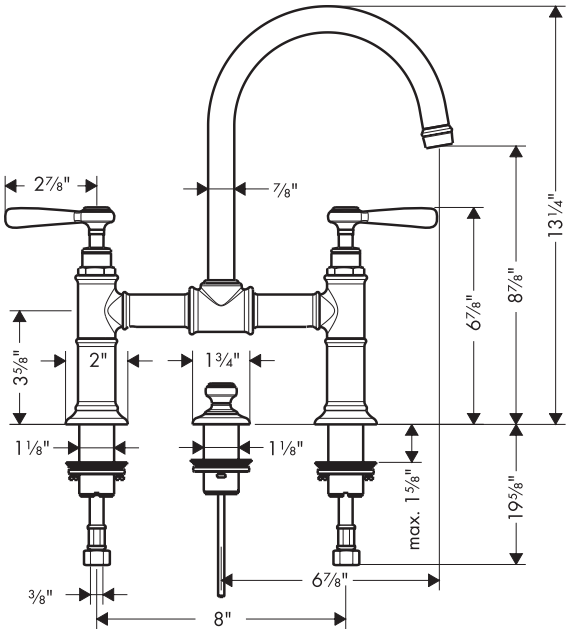


The measurements shown are for reference only.

Products and specifications shown are subject to change without notice.

Specification sheet revised 5/2009

AXOR
hansgrohe