Contemporary Soap Dispenser
Finishes : **Chrome** Part no. : **04539000**

Description

Features

- 16 oz bottle capacity

Item details

List Price	$ 58.00

Product image
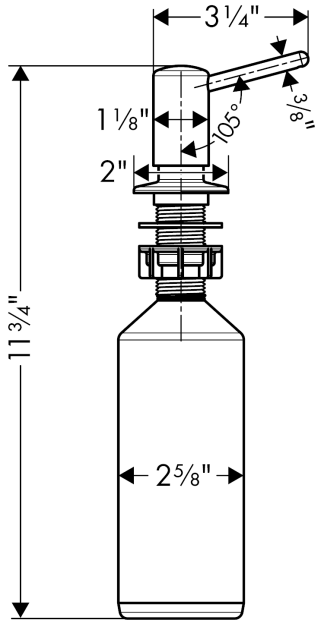
Scale drawing