Loure®

24" Double Towel Bar

K-11582

Features

- KOHLER finishes resist corrosion and tarnish.
- Coordinates with Loure faucets and accessories.

Material

- Premium metal construction for durability.

Installation

- Tools and installation template included.

Components

Additional included component/s: Tools, and Installation template.

Codes/Standards

None Applicable

KOHLER® Faucet Lifetime Limited Warranty

See website for detailed warranty information.

Available Color/Finishes

Color tiles intended for reference only.

Color	Code	Description
	CP	Polished Chrome
	SN	Vibrant® Polished Nickel
	BN	Vibrant® Brushed Nickel

Loure®

24" Double Towel Bar

K-11582

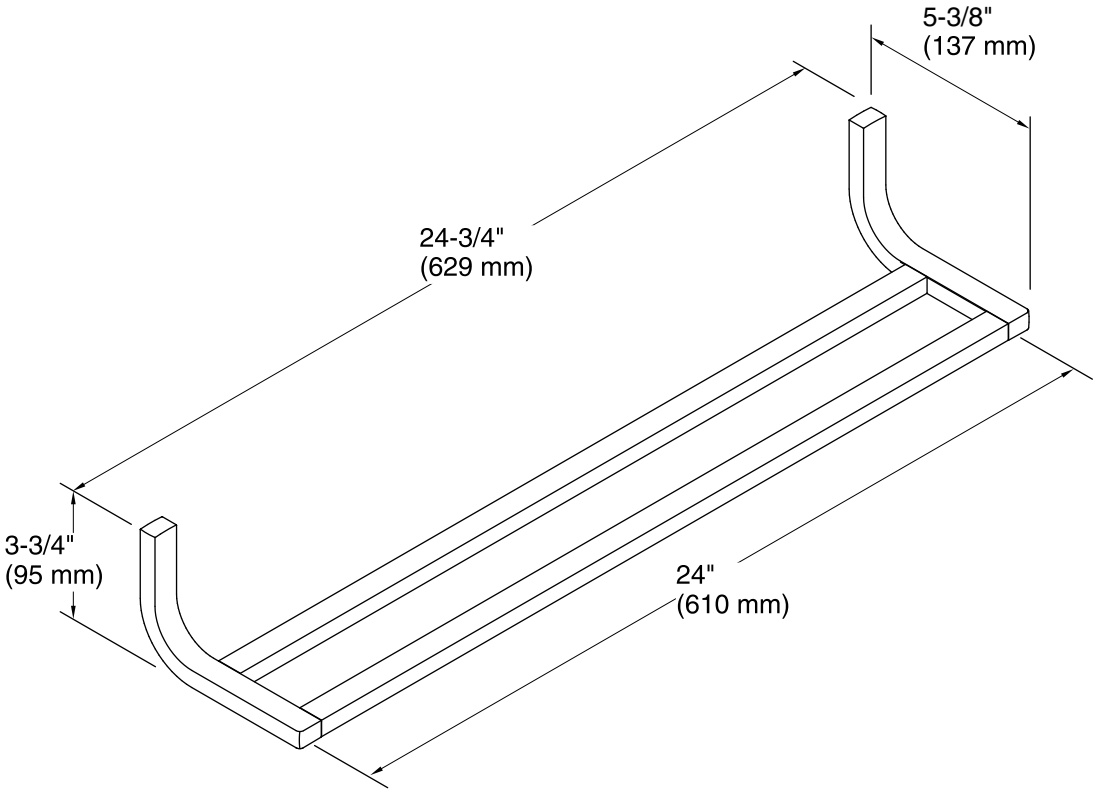

Technical Information

All product dimensions are nominal.

Notes

Install this product according to the installation guide.

CAUTION: Risk of personal injury. Do not install these products in any area where they are likely to be used inadvertently as a grab bar or support bar. These products are not designed or intended for use as a grab bar or support bar.