Underscore®

5' BubbleMassage™ Bath

K-1167-G

Features
- End drain.
- Slotted overflow for deep soaking.
- Integral lumbar support.
- 60" (1524 mm) x 30" (762 mm) x 19" (483 mm)

Material
- Acrylic

Hydrotherapy
- 122 BubbleMassage™ airjets. 18 levels of massage intensity.
- Zones of Control feature allows you to target massage to back, midsection, or feet.
- Automatic purge cycles remove residual water from air channels after use.
- Built-in 300 W heater.
- Lighted keypad control.

Installation
- Drop-in or under-mount.

Required Accessories
K-7271 Brass Slotted Overflow Bath Drain
or
K-7272 PVC Slotted Overflow Bath Drain

Recommended Accessories
K-1491 Bath/Whirlpool Pillow
K-1601 Bath/Whirlpool Footstop
K-1703 Whirlpool Remote Control
K-531 Under-mount Installation Kit
K-9498 3" Keypad Trim
K-24916 Wireless Music Kit
K-1705 Whirlpool/BubbleMassage™ Remote Control
K-702200-G54 Frameless Sliding Bath Door
K-702200-G73 Frameless Sliding Bath Door
K-702200-L Frameless Sliding Bath Door
K-702205-L Frameless Sliding Bath Door
K-706000-D3 Frameless Sliding Bath Door
K-706000-L Frameless Sliding Bath Door
K-706003-L Frameless Sliding Bath Door
K-706004-D3 Frameless Sliding Bath Door
K-706004-L Frameless Sliding Bath Door
K-706007-L Frameless Sliding Bath Door

ADA

Codes/Standards
ASME A112.19.7/CSA B45.10
CSA B45.5/IAPMO Z124
ASTM E162
ASTM E662
UL 1795
CSA C22.2 No. 218.2
Greenguard UL 2818 - Gold
ADA
ICC/ANSI A117.1
CARB P2

KOHLER® One-Year Limited Warranty
See website for detailed warranty information.

Available Color/Finishes
Color tiles intended for reference only.

Color	Code	Description
	0	White
	96	Biscuit
	47	Almond
	NY	Dune
	95	Ice™ Grey
	G9	Sandbar
	33	Mexican Sand™

Underscore®

5' BubbleMassage™ Bath

K-1167-G

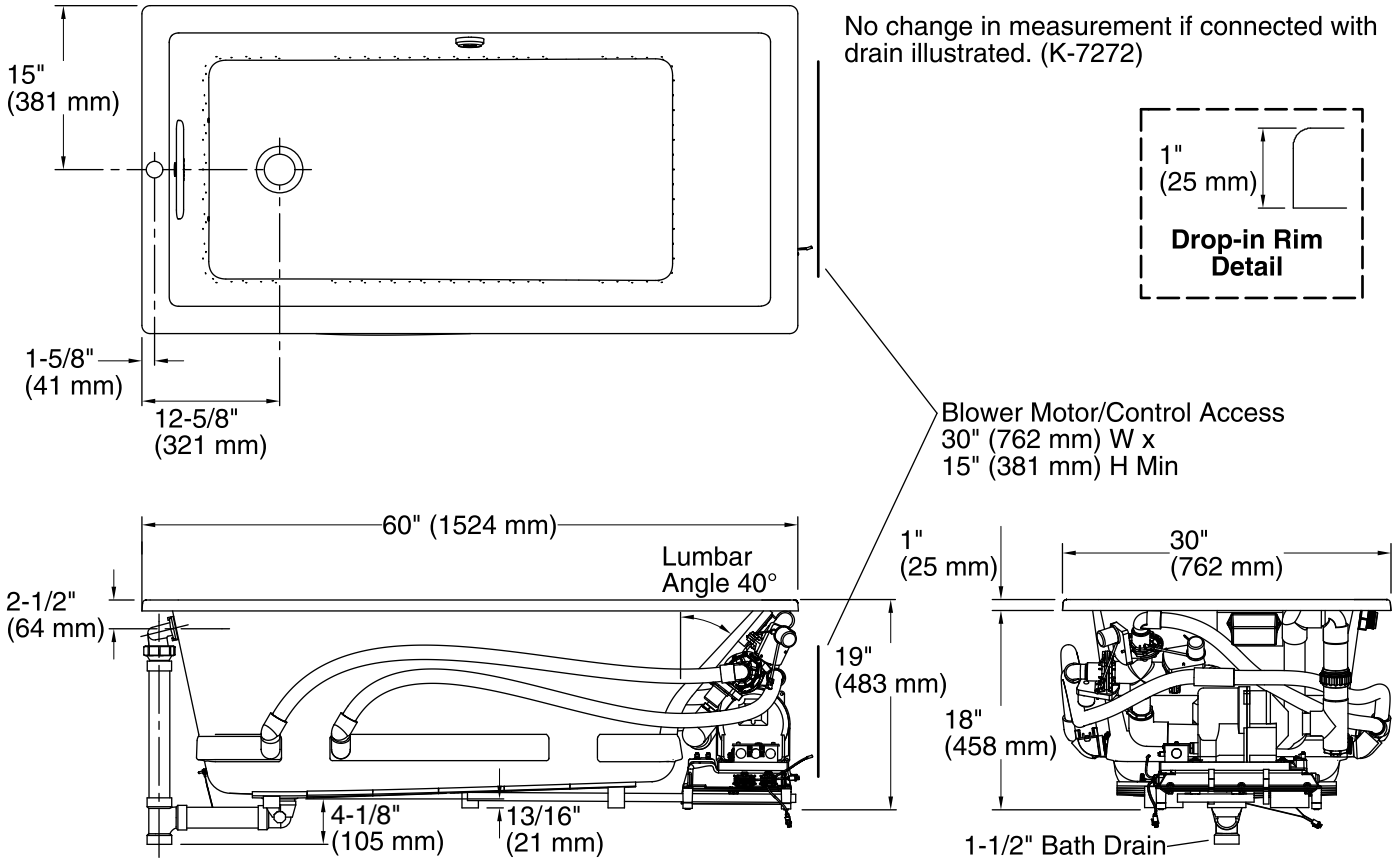

Required Electrical Service

One dedicated circuit required, protected with Class A Ground-Fault Circuit-Interrupter (GFCI) or Residual Current Device (RCD).

Blower:	240 V, 15 A, 50/60 Hz

Technical Information

All product dimensions are nominal.

Installation:	Drop-in, Under-mount
Drain location:	End
Basin area, bottom:	42-3/8" x 20" (1076 mm x 508 mm)
Basin area, top:	54-3/8" x 24-5/16" (1381 mm x 618 mm)
Weight:	96 lbs (43.5 kg)
Minimum floor load:	50 lbs/ft² (244.1 kg/m²)
Water depth:	15-1/16" (383 mm)
Water capacity:	59.8 gal (226.4 L)
Cutout:	Drop-in, 59-1/2" x 28-1/2" (1511 mm x 724 mm)
Electrical component rating:	Blower: 240 V, 5 A, 50/60 Hz, 300 W
Blower speed:	Variable
Minimum flat for door:	2-1/2" (63 mm)

Notes

Measure your actual product for rough-in details.

Install this product according to the installation instructions.

The hot water supply should be 70% of the capacity of the bath or greater. Installations will vary.

If relocating the blower motor, do not relocate or alter the PVC tee or coiled flexible tubing connected to the blower. Follow the blower relocation instructions exactly. Provide access for servicing the blower.

ADA compliant when installed to the specific requirements of these regulations.