Underscore®

5.5' Bubblemassage™ Whirlpool Bath

K-1173-XH2G

Features

- End drain.
- Automatic purge cycles remove residual water from air channels after use.
- Integral lumbar support.
- Slotted overflow allows for deep soaking.
- Less trim.
- 66" (1676 mm) x 36" (914 mm) x 22" (559 mm)

Material

- Acrylic

Hydrotherapy

- 118-122 BubbleMassage™ airjets.
- Variable-speed pump for adjusting hydromassage intensity.
- Eight fully adjustable Flexjet™ hydrotherapy jets for water flow and direction.
- Zones of Control feature allows you to target massage to back, midsection, or feet.
- Built-in 1500 W heater.
- Lighted keypad control.

Installation

- Drop-in or under-mount.

Required Accessories

K-7271 Brass Slotted Overflow Bath Drain

or

K-7272 PVC Slotted Overflow Bath Drain

Recommended Accessories

K-1601 Bath/Whirlpool Footstop
K-9497 2-1/2" Keypad Trim
K-9498 3" Keypad Trim
1172315 Vibracoustic® Bath Mounting Plate
K-24916 Wireless Music Kit
K-591 Under-mount Installation Kit
K-1491 Bath/Whirlpool Pillow

Codes/Standards

ASME A112.19.7/CSA B45.10
CSA B45.5/IAPMO Z124
ASTM E162
ASTM E662
UL 1795
CSA C22.2 No. 218.2
Greenguard UL 2818 - Gold
CARB P2

KOHLER® One-Year Limited Warranty

See website for detailed warranty information.

Available Color/Finishes

Color tiles intended for reference only.

Color	Code	Description
	0	White
	96	Biscuit
	47	Almond
	NY	Dune
	95	Ice™ Grey
	G9	Sandbar
	33	Mexican Sand™
	K4	Cashmere
	58	Thunder™ Grey
	7	Black Black™

Underscore®

5.5' Bubblemassage™ Whirlpool Bath

K-1173-XH2G

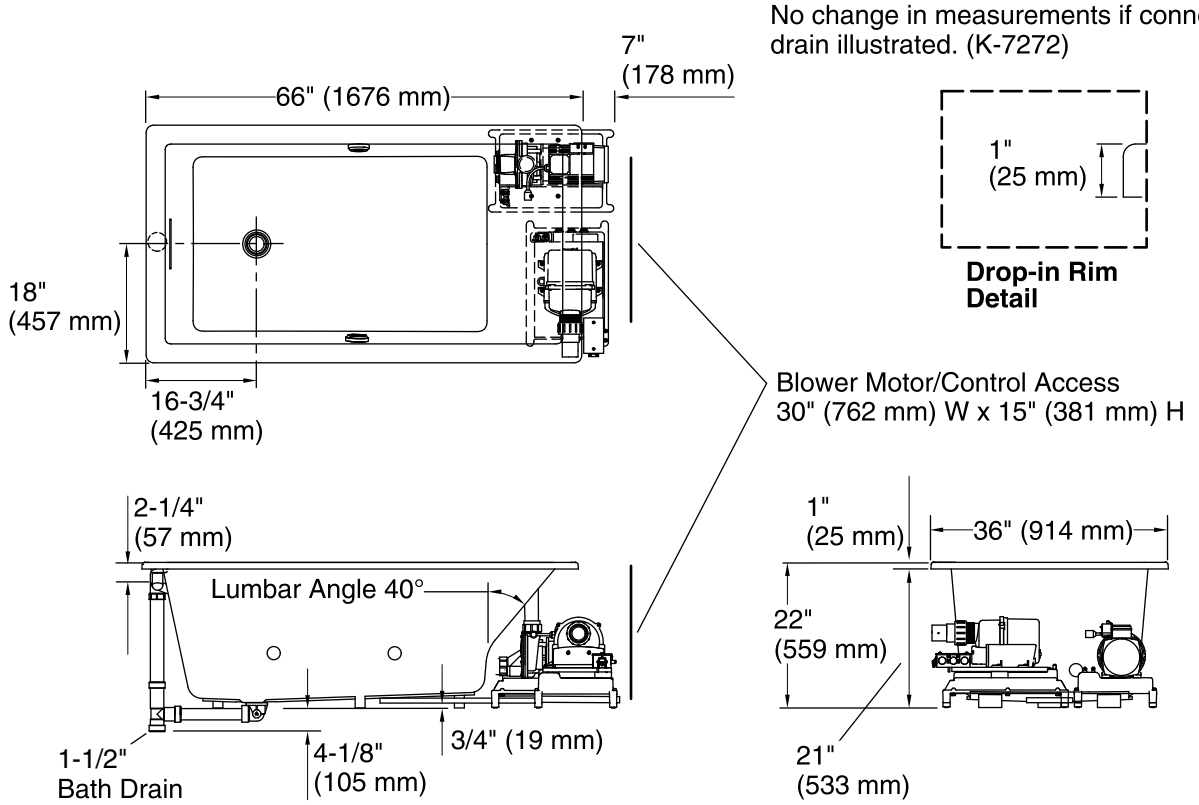

Required Electrical Service

One dedicated circuit required, protected with Class A Ground-Fault Circuit-Interrupter (GFCI) or Residual Current Device (RCD).

Blower, Pump, Heater:	220-240 V, 20 A, 50/60 Hz

Technical Information

All product dimensions are nominal.

Installation:	Drop-in, Under-mount
Drain location:	Reversible
Basin area, bottom:	44-1/2" x 26-1/2" (1130 mm x 673 mm)
Basin area, top:	60-1/4" x 30-1/4" (1530 mm x 768 mm)
Weight:	187 lbs (84.8 kg)
Minimum floor load:	62.5 lbs/ft² (305.2 kg/m²)
Water depth:	17-3/4" (450 mm)
Water capacity:	102 gal (386.1 L)
Cutout:	Drop-in, 65-1/2" x 35-1/2" (1664 mm x 902 mm)
Electrical component rating:	Blower: 220-240 V, 5 A, 50/60 Hz Pump: 220-240 V, 11 A, 50/60 Hz Heater: 220-240 V, 50/60 Hz, 1500 W

Notes

Measure your actual product for rough-in details.

Install this product according to the installation instructions.

The hot water supply should be 70% of the capacity of the bath or greater. Installations will vary.

IMPORTANT! Dry fit the drain assembly prior to installing the bath. The bath cannot be installed with all drain components attached.

The pump base extends 7" (178 mm) beyond the edge of the rim. Modify the framing as needed.

THE BOLD LOOK OF KOHLER®