# Wellworth®

Pedestal Bathroom Sink

**K-2293-8**

## Features

- Vitreous china.
- Pedestal sink.
- With overflow.
- 8-inch centers.
- Coordinates with other products in the Wellworth collection.
- 22-1/4" (565 mm) x 18-1/4" (464 mm) x 34-7/8" (886 mm)

## Recommended Accessories

K-7605-P Angle Supply with Stop (pair)
K-8998 P-Trap

## Optional Accessories

1041816 Hardware kit, Hollow Wall

## Components

Product includes:

K-2019 Bathroom Sink Pedestal
K-2296-8 Pedestal Bathroom Sink Basin
Additional included component/s: Accessory pack, and rubber pads.

## Codes/Standards

ASME A112.19.2/CSA B45.1

## KOHLER® One-Year Limited Warranty

See website for detailed warranty information.

## Available Color/Finishes

*Color tiles intended for reference only.*

| Color | Code | Description |
|---|---|---|
| | 0 | White |
| | 96 | Biscuit |
| | 47 | Almond |



THE BOLD LOOK OF KOHLER®

# Wellworth®

Pedestal Bathroom Sink

**K-2293-8**

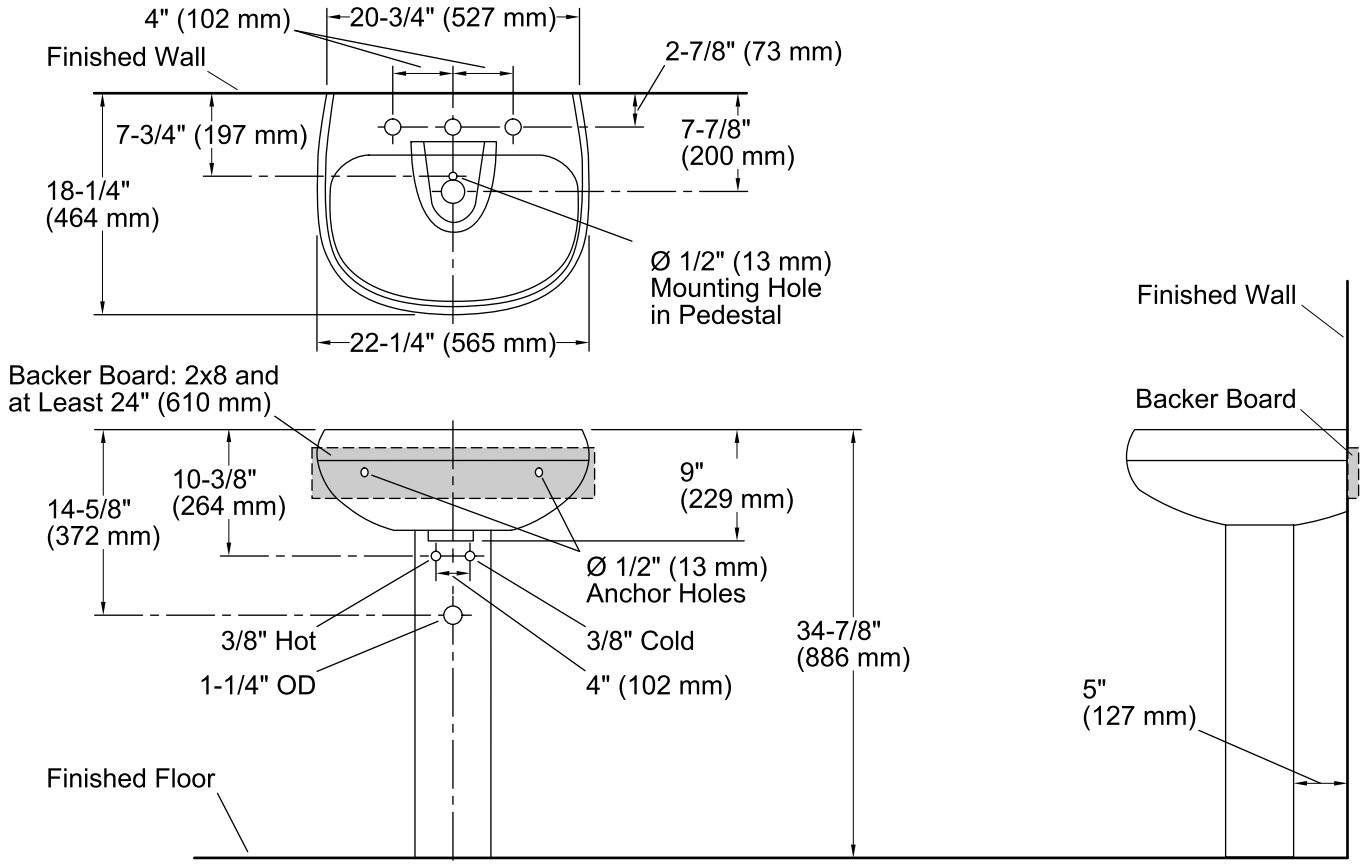


## Technical Information

All product dimensions are nominal.

| | |
|---|---|
| Bowl configuration: | Single |
| Installation: | Pedestal |
| Bowl area (Only) | Length: 20" (508 mm)<br>Width: 12" (305 mm)<br>Water depth: 5" (127 mm) |
| Number of deck holes: | 3 |
| Faucet hole(s): | 1-3/8" (35 mm) |
| Drain hole: | 1-3/4" (44 mm) |

## Notes

Install this product according to the installation instructions.