Vault™

Top-mount/Under-mount Bar Sink

K-3840-2

Features

- 18-inch minimum base cabinet width.
- 18-gauge stainless steel.
- Top-mount or under-mount.
- Single bowl.
- 9-inch depth.
- Two faucet holes.
- Includes bottom bowl rack.
- Includes installation hardware.
- 15" (381 mm) x 15" (381 mm).

Optional Accessories

K-8801 Sink Strainer
1177161 Installation Clip Kit

Components

Product includes:
K-2993 Bar Sink Rack
Additional included component/s: Cut-out template, and Hardware kit – top-mount.

ADA

Codes/Standards

ASME A112.19.3/CSA B45.4
ADA
ICC/ANSI A117.1

Lifetime Limited Warranty for KOHLER® Stainless Steel Sinks

See website for detailed warranty information.

Vault™

Top-mount/Under-mount Bar Sink

K-3840-2

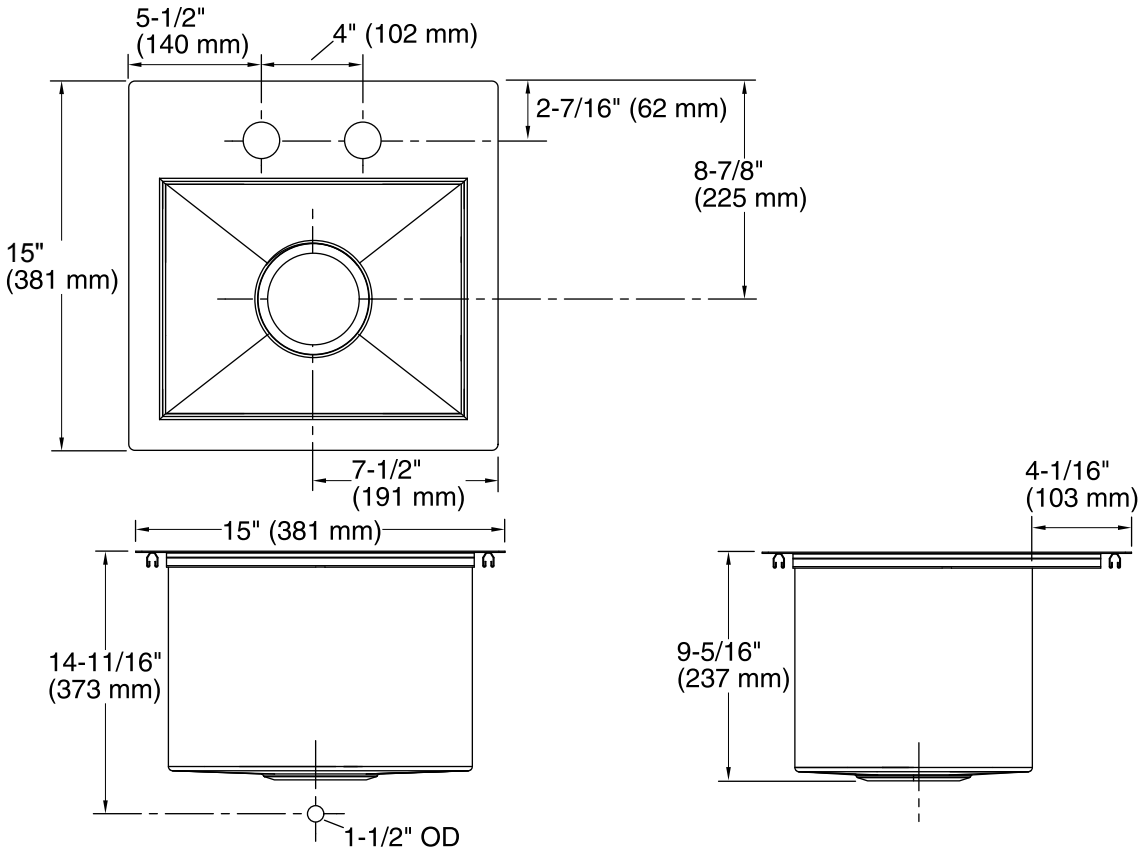

Technical Information

All product dimensions are nominal.

Bowl configuration:	Single
Installation:	Top-mount, Under-mount
Bowl area (Only)	Length: 12-1/4" (311 mm) Width: 9-9/16" (243 mm) Bowl depth: 9" (229 mm)
Number of deck holes:	2
Faucet hole(s):	1-7/16" (37 mm)
Drain hole:	3-5/8" (92 mm)
Template:	1161548-7, required, included

Notes

Install this product according to the installation instructions.

ADA compliant when installed to the specific requirements of these regulations.