KOHLER. Faucets

Transfer Valve Trim
K-T9540

Features
- Brass construction.
- Bath- or deck-mount installation.
- Lever handle.

Required Accessories
K-408-K Bath-mount Transfer Valve
or
K-409-K Deck-mount Transfer Valve

Codes/Standards
ASME A112.18.1/CSA B125.1

KOHLER® Faucet Lifetime Limited Warranty
See website for detailed warranty information.

KOHLER. Faucets

Transfer Valve Trim
K-T9540

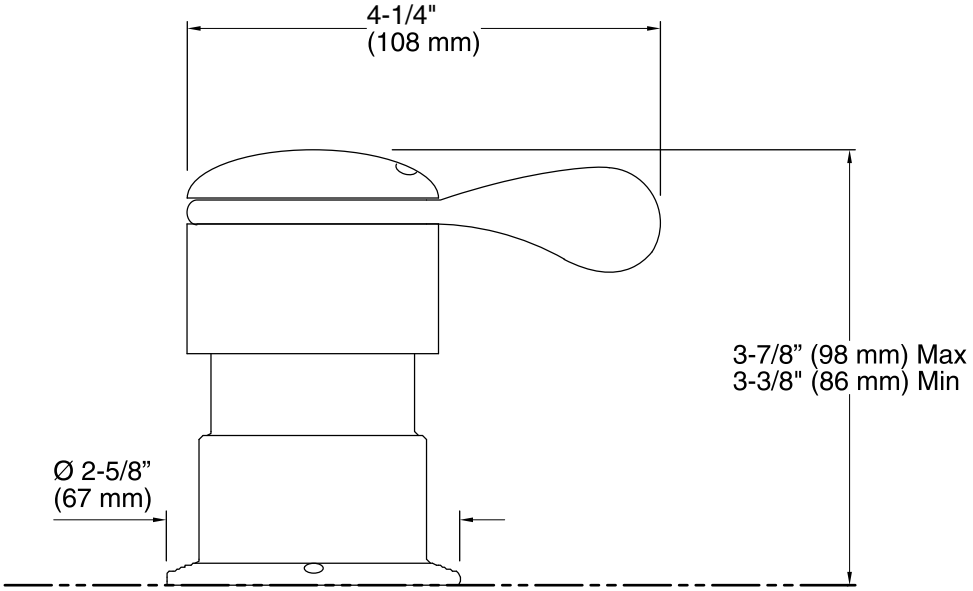

Technical Information
All product dimensions are nominal.

Notes
Install this product according to the installation guide.