MOEN

Buy it for looks. Buy it for life.®

# Specifications

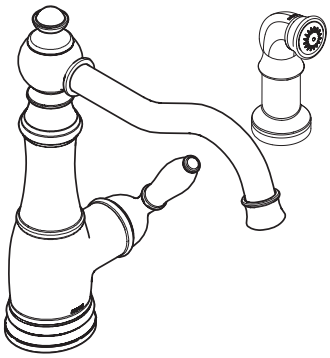

## WEYMOUTH

### Single Handle Single Hole Mount High Arc Kitchen Faucet

**Models:** S72101 series with spray

**NOTE:** THIS FAUCET IS DESIGNED TO BE INSTALLED THRU 1 OR 2 HOLES: A 1-1/2" (38MM) MIN. DIA. HOLE FOR VALVE AND A 1-1/4" (32MM) MIN. DIA. HOLE FOR SIDE SPRAY.

GREEN UPC ®

**FAUCET DESCRIPTION**
- Metal construction with various finishes identified by suffix
- Includes matching side spray with Duralock quick connect system
- Single hole mounting
- Flexible supply lines with 3/8" compression fittings
- 360˚ rotating spout provides ability to install handle on either side

**OPERATION**
- Single handle lever
- Temperature controlled by 100˚ arc of handle travel

**FLOW**
- Spout flow is limited to 1.5 gpm (5.7 L/min) at 60 psi

**CARTRIDGE**
- 1255™ Duralast™ cartridge for Single-Handle Faucets

**STANDARDS**
- Third party certified to IAPMO Green, ASME A112.18.1/CSA B125.1 and all applicable requirements referenced therein including NSF 61/9
- Meets CalGreen and Georgia SB370 requirements
- Complies with California Proposition 65 and with the Federal Safe Drinking Water Act
- **ADA** for lever handle

**WARRANTY**
- Lifetime limited warranty against leaks, drips and finish defects to the original consumer purchaser
- 5 year warranty if used in commercial installations

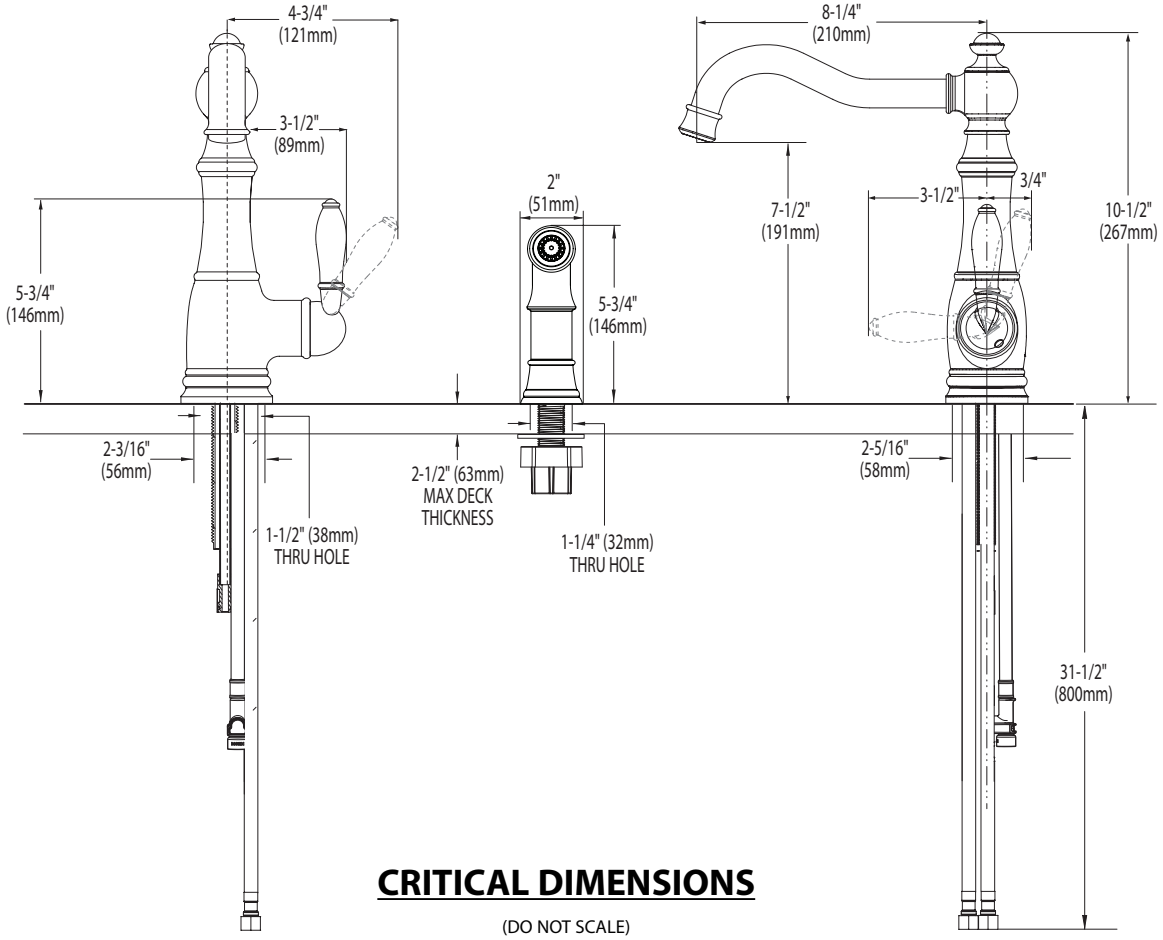


## CRITICAL DIMENSIONS

(DO NOT SCALE)

Rev. 3/13

**TO ORDER PARTS CALL: 1-800-BUY-MOEN**
**www.moen.com**

01/17/2014 SPC13753 500000149600
Rev.Date:03/14