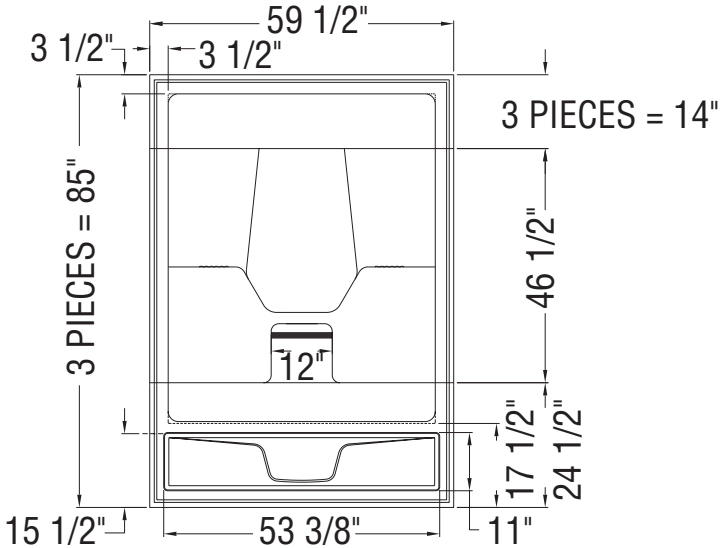

MICRO-JETS SYSTEM

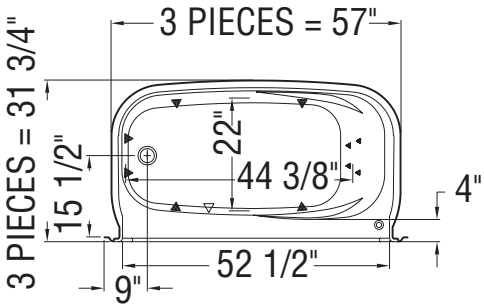

AIR SYSTEM

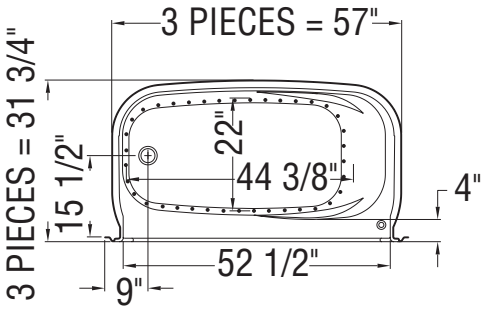

(▲) : Indicates whirlpool and backjets positioning
(△) : Indicates suction positioning
(•) : Indicates airjets positioning

All dimensions are approximate. Structure measurements must be verified against the unit to ensure proper fit.