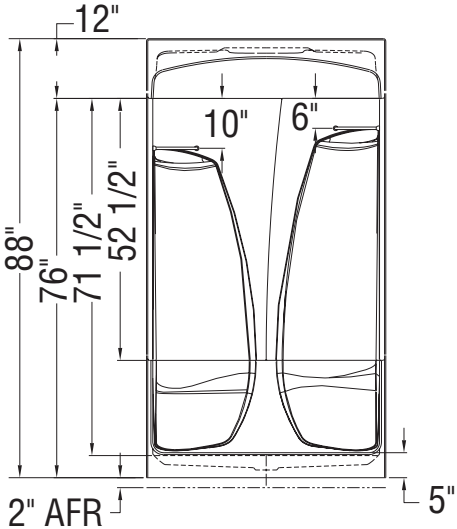

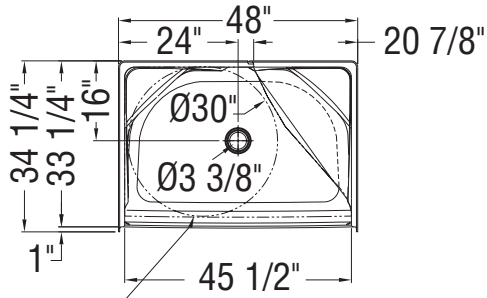

AREA: 1064 sq.in.
Right Seat

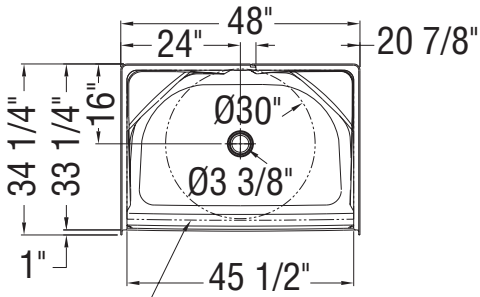

AREA: 1363 sq.in.
No Seat

All dimensions are approximate. Structure measurements must be verified against the unit to ensure proper fit.