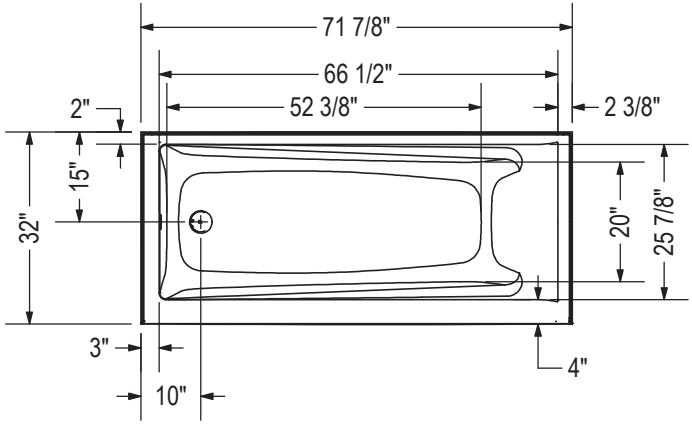

IFS Without System
Single tiling flange

IFS With System
(access panel)
Single tiling flange

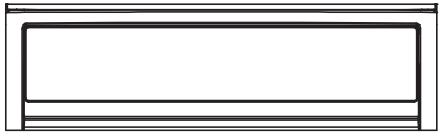

1" Single integrated tiling flange (shown)
2" Double integrated tiling flange (not shown)
IFS model (shown)

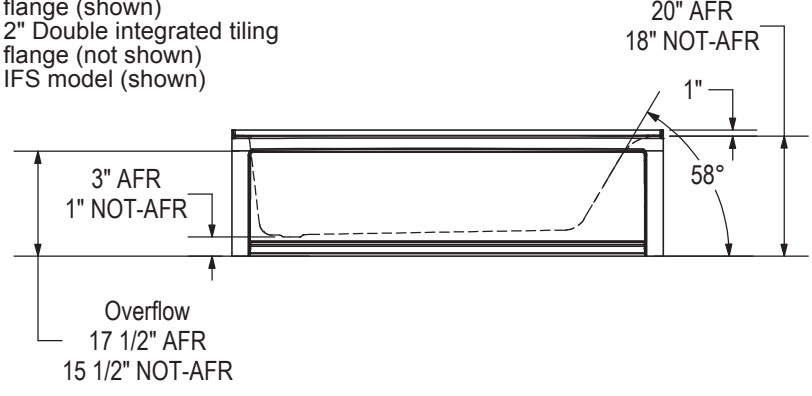

WHIRLPOOL SYSTEM

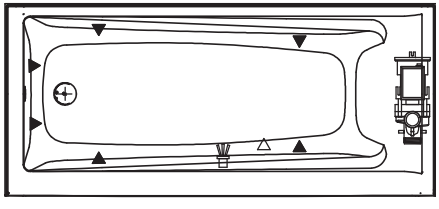

AIR SYSTEM

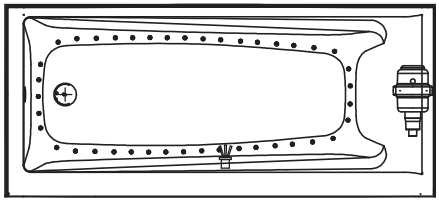

(▲) : Indicates whirlpool jets positioning
(△) : Indicates suction positioning
(●) : Indicates airjets positioning
( ) : Indicates chromatherapy light positioning

Technical drawing is universal for all Exhibit 7232 configurations.

Wood support design may vary.
Single Integrated tiling flange: 1" height x 1/4" thickness (shown)
Double Integrated tiling flange: 2" height (not shown)

All dimensions are approximate.
Structure measurement must be verified against the unit to ensure proper fit.