MOEN

Buy it for looks. Buy it for life.®

Specifications

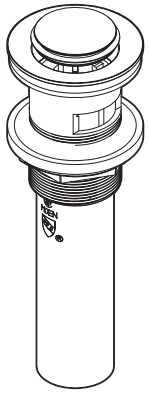

1-1/4" Push Button Drain with Overflow

Models: 131553 series

DESCRIPTION
- Metal construction with various finishes identified by suffix
- Spring loaded push button waste assembly
- With overflow

STANDARDS
- Third party certified to: ASME A112.18.2 and CSA B-125 and all applicable requirements referenced therein

WARRANTY
- Lifetime limited warranty against leaks, drips and finish defects to the original homeowner
- 10 year limited warranty when used in a multifamily installation
- 5 year limited warranty when used in a commercial installation

Visit www.moen.com/support for complete details and limitations

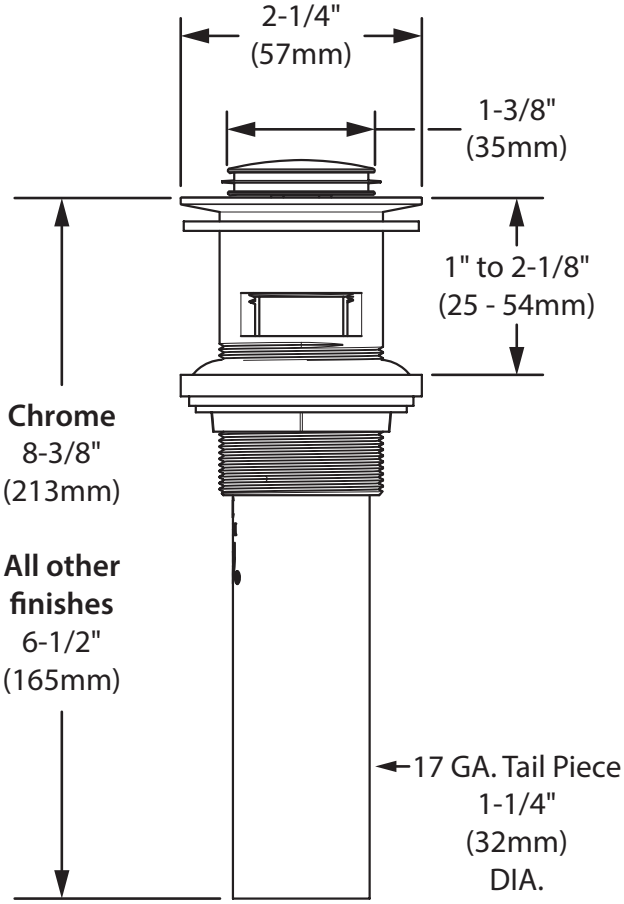

CRITICAL DIMENSIONS

(DO NOT SCALE)

FOR MORE INFORMATION CALL: 1-800-BUY-MOEN
www.moen.com

01/25/2019 SPC131540 500000107594
Released 01