MOEN

Buy it for looks. Buy it for life.®

Specifications

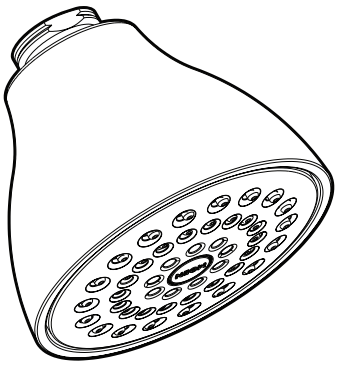

Moenflo® XL
Single Function Showerhead

Models: 6322 series

DESCRIPTION
- Available in various finishes identified by suffix
- Fixed mount showerhead only
- Nonmetallic spray face and shell
- Brass swivel ball assembly

FLOW
- Showerhead is limited to 2.5 gpm (9.5 L/min) at 80 psi
- EP suffix models are limited to 1.75 gpm (6.6 L/min) at 80 psi

STANDARDS
- Third party certified to meet ASME A112.18.1/CSA B125.1 and all applicable requirements referenced therein
- EP suffix models are IAPMO Green listed and third party certified to WaterSense®

WARRANTY
- Lifetime limited warranty against leaks, drips and finish defects to the original homeowner
- 10 year limited warranty when used in a multifamily installation
- 5 year limited warranty when used in a commercial installation

Visit www.moen.com/support for complete details and limitations

WaterSense
Meets EPA Criteria
Certified by IAPMO R&T

EP Suffix Models Only

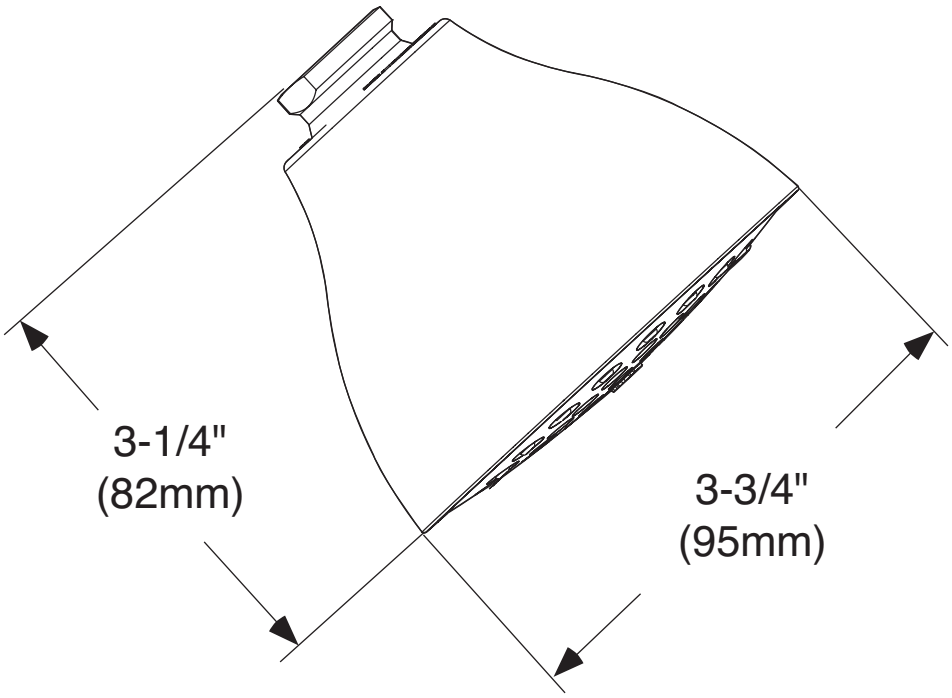

CRITICAL DIMENSIONS
(DO NOT SCALE)