Ellsworth Technical Specification

Pivoting Paper Holder DN9108

Stock Numbers:

- **DN9108BN – Pivoting Paper Holder**
  Brushed Nickel Finish
- **DN9108BRB – Pivoting Paper Holder**
  Mediterranean Bronze Finish
- **DN9108CH – Pivoting Paper Holder**
  Chrome Finish

Dimensions:

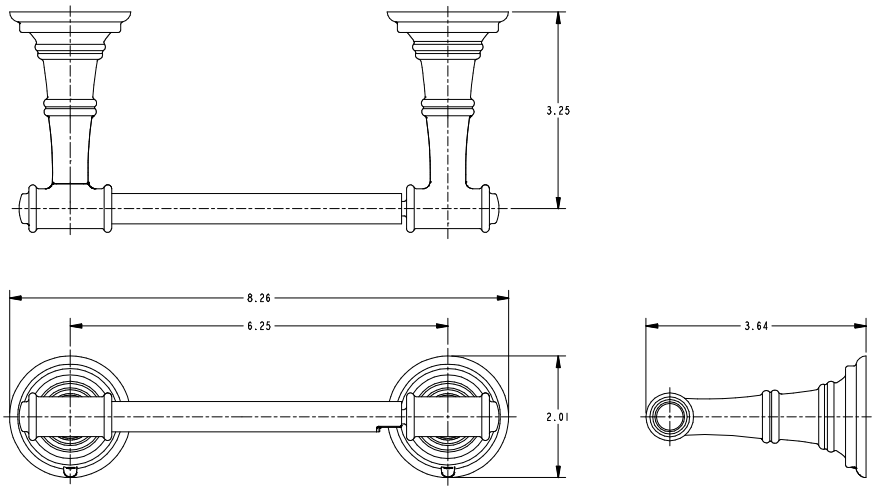

Materials:

Pivoting Paper Holder post is die cast from highest quality zinc alloy (Zamac). Casting is plated Chrome, Brushed Nickel or Mediterranean Bronze. The **Pivoting Paper Holder arm** is stainless steel.

Installation Instructions:

1. Position the mounting template on the wall in the desired location.
2. Using a level, align the template and tape it to the wall.
3. Drill two 5/16" holes at each mounting post location that corresponds to your product.
4. Remove the template from the wall.
5. Fold ends of the plastic toggle together and insert into each hole in the wall.
6. Lightly tap anchors until flush with the wall.
7. One at a time, insert plastic pin into each of the anchors and lightly tap to activate anchor. Remove pin and repeat on all anchors.
8. Remove mounting posts from the product assemblies by loosening each setscrew.
9. Place the mounting plate on the wall over the installed wall anchors with "UP" facing you.
10. Insert screws through the mounting plate into the anchors. Tighten the screws.
11. Place each assembly over the mounting posts with setscrews facing down. Pivoting post with bar should be on the left side. Tighten both setscrews.

Cleaning Instructions:

To preserve the fine finish of this product, clean only with a soft damp cloth. Dry well. Do not use commercial or abrasive cleaners.

Stock Number:_____Pivoting Paper Holder By Creative Specialties

Creative Specialties® International
a Division of MOEN
Buy it for looks. Buy it for life.®

25300 AL MOEN DRIVE • NORTH OLMSTED, OH 44070
CORPORATE HEADQUARTERS: (800) 321-8809 • FAX: (800) 848-6636
INTERNATIONAL: (440) 962-2000 • FAX: (440) 962-2726
CUSTOMER SERVICE (USA): 800-882-0116 • FAX: (888) 379-2720
WWW.MOEN.COM

©Copyright Creative Specialties International

Literature # BA1590

INVITCH12 SPECSHEET 500000130733
Released:12